TECHNICAL HANDBOOK MT SYSTEM

Including technical data according to Eurocode 3 (EN 1993)

Version 1.0
January 2025

Terms of common cooperation / Legal disclaimer

The product loading capacities published in these Technical Data Sheets are only valid for the mentioned codes or technical data generation methods and the defined application conditions (e.g. ambient temperature load capacity not valid in case of fire, data not valid in support structures when mixed with third party products), assuming sufficient fastener, base material and building structure strength. Additional calculations, checks and releases by the responsible structural engineer are needed to clarify the capacity of base material and building structure. Suitability of structures combining different products for specific applications needs to be verified by conducting a system design and calculation, using for example Hilti PROFIS software.

In addition, it is crucial to fully respect the Instructions for Use and to assure clean, unaltered and undamaged state of all products at any time in order to achieve this loading capacity (e.g. misuse, modification, overload, corrosion).As products but also technical data generation methodologies evolve over time, technical data might change at any time without prior notice.
We recommend to use the latest technical data sheets published by Hilti.

In any case the suitability of structures combining different products for specific applications need to be checked and cleared by an expert, particularly with regard to compliance with applicable norms and permits, prior to using them for any specific facility. This book only serves as an aid to interpret the suitability of structures combining different products for specific applications without any guarantee as to the absence of errors, the correctness and the relevance of the results or suitability for a specific application. User must take all necessary and reasonable steps to prevent or limit damage. The suitability of structures combining different products for specific applications are only recommendations that need to be confirmed with a professional designer and/or structural engineers to ensure compliance with User`s specific jurisdiction and project requirements.

TABLE OF CONTENTS

Technical Notes

Technical Notes 10–13

1 MT System

1.1 MT Open C-Channel Fixation 15–18
1.2 MT Box Profile Fixation 19-24

2 MT Profiles

2.1 MT Trapeze Profiles 25–29
2.2 MT Open C-Channels (Single) 30–31
2.3 MT Open C-Channels (Double) 32–34
2.4 MT Box Profiles 35–36
2.5 MT Profiles Technical Data 37–60

3 MT Brackets

3.1 MT Brackets 61–64

4 MT Connectors

4.1 MT Open C-Channel Connectors 65–103
4.2 MT Open C-Channel Fast-Lock Connectors 104-117
4.2 MT Box Profiles Connectors 118–149

5 MT Baseplates

5.1 MT Open C-Channel Baseplates 150–168
5.2 MT Box Profiles Baseplates 169–188

6 MT Media Fixation

6.1 MT Media Fixation For Open C-Channels 189–202
6.2 MT Media Fixation For Box Profiles 203–216

7 MT Miscellaneous

7.1 MT Beam Clamps 217–218
7.2 MT Profile End Caps 219–222
7.3 MT Profile Rubber Inlays 223–224

8 MT Roof Top Application Portfolio

8.1 MT Roof Top Application Portfolio 225-230

9 MT Seismic Bracing Portfolio

9.1 Seismic Bracing Portfolio 231-250

10 MT Elevator Divider Beam Portfolio

10.1 Elevator Divider Beams Portfolio 251-257

ONE SYSTEM, COUNTLESS SCENARIOS

Easier to design and assemble than ever, Hilti's MT System is a flexible, modular solution for virtually all your installation support structures.

DO MORE WITH LESS

From light utilities like air ducts, communication cables and cable trays to larger non-critical piping, heavier cable ladders and mechanical equipment, Hilti's MT System handles most loading scenarios while enabling highly efficient installations.

This allows you to streamline the planning, managing and assembly of your metal framing and support structures. For example, you can seamlessly combine all MEP utilities into a single structure designed for optimal efficiency.

The MT System's cross-compatibility and interchangeability help enable value-engineered solutions that optimize costs and improve sustainability. The components and baseplates complement the range of profiles, so you can complete your installation with one system.

DESIGN WITH EASE

The MT System's large portfolio of trapeze profiles, C-Channels and box profiles make it easier to design even complex multi-trade support installations. The system also features direct box-profile-on-box-profile connectivity as well as direct fixation of Trapeze and C-Channel profiles to box profiles. Additionally, some connectors are compatible with both C-Channels and box profiles.

EMBRACE SIMPLICITY

The MT System features intuitive, robust bolting mechanisms for box profiles to help minimize installation errors: The Thread Forming Bolt (MT-TFB) is the go-to bolt for all domed hole connections, so you'll always have the right bolt for a given fixation combination.

More productive

Releasing, repositioning and subsequent retorquing of TFB fixations is enabled, allowing the modular system to remain flexible.

More intuitive

The variety of needed connectors is reduced, helping minimize the complexity and cost of stock management. Fixation of elements to box profile domed holes can be accomplished with just one version of a simple bolt.

More Secure

The Hilti SIW-AT impact wrench with Adaptive Torque system helps you set bolts to the recommended tightness more quickly and consistently.

Hilti's MT-TFB Thread Forming Bolts securely connect to box profile without the need for nuts or washers. During installation, a robust thread is formed within the box profile dome, reducing the risk of thread stripping.

YOUR PARTNER FOR PRODUCTIVITY

ATTACH, ADJUST, RE-ADJUST.

With the new hybrid profile MT-90H, media connections are faster and simpler than ever before. Complex 3D structures requiring a high degree of adjustability can be mastered more easily.

Value engineered

Space-saving designs can be created to accommodate installations in tight spaces while allowing easy access for maintenance. The MT System offers full flexibility and adjustability with few parts and assembly steps needed.

Higher performing

No additional C-Channels need to be mounted on top of the box profile, which helps reduce weight and CO_2 while speeding up mounting time to decrease the total cost of installation.

More peace of mind

The MT System covers a wide range of codes and approvals. Our Global Project Management support can assist you in realizing your project from planning to execution, while helping you meet your time, cost and sustainability objectives.

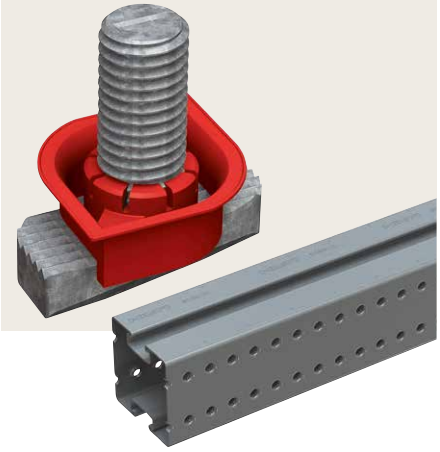

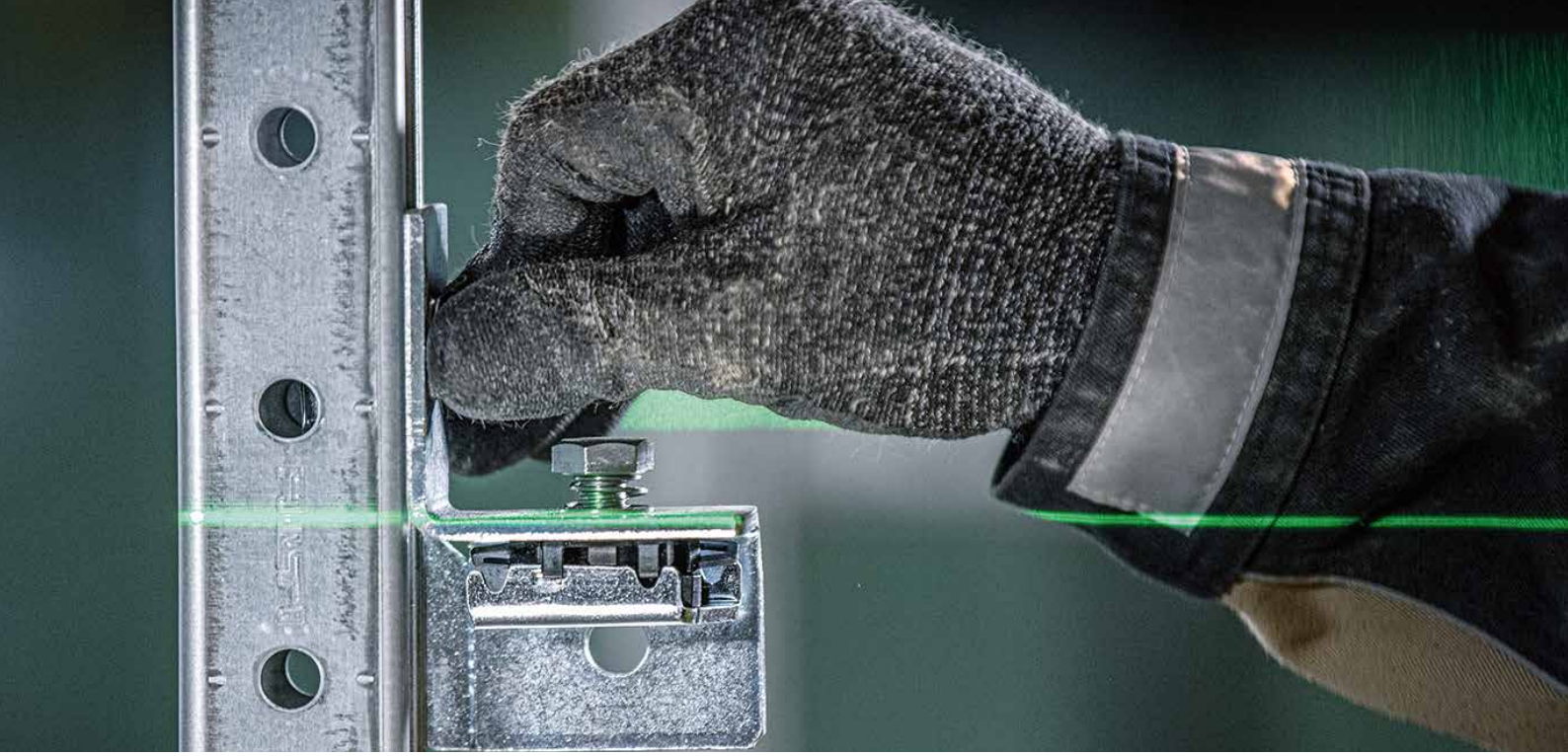

FASTER, SIMPLER, DONE

The MT System offers a comprehensive range of preassembled connectors and baseplates to help speed up installation of your MEP supports.

Faster

By eliminating non-value-adding steps from the assembly process, you can achieve up to 50% time savings compared to basic connection solutions.

Safer

The MT System is compatible with our Adaptive Torque (AT) module, enabling consistent torquing, while pre-assembled parts reduce the likelihood of installation mistakes.

Simpler

With fewer single parts and boxes to handle on the jobsite, your purchasing and stock management processes become easier.

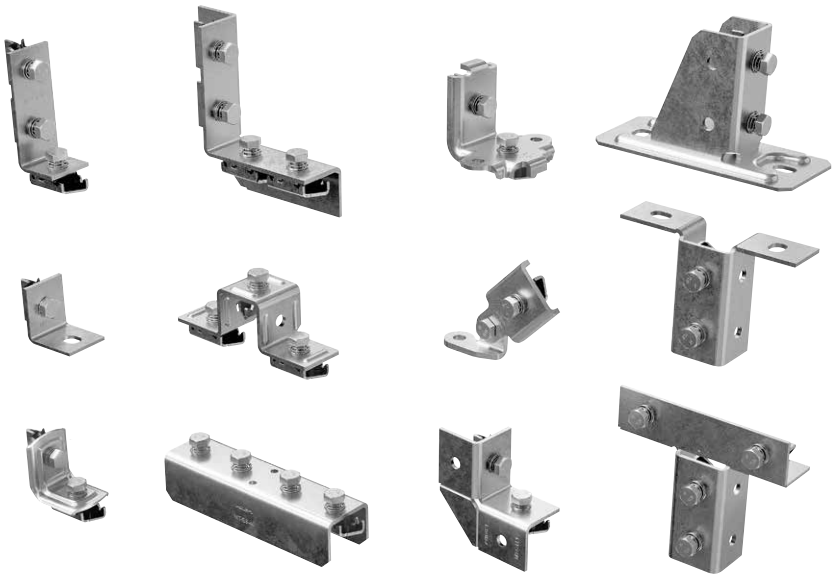

Fast-Lock innovation

The preassembled connectors feature an innovative connection mechanism that enhances installation flexibility.

Simple and easy to use, it provides a reliable connection on MT C-Channels and can be easily disassembled, adjusted and repositioned even after initial full torque.

The Fast-Lock and the preassembled portfolios are available in both Indoor Coated (black) and Outdoor Coated (red) versions.

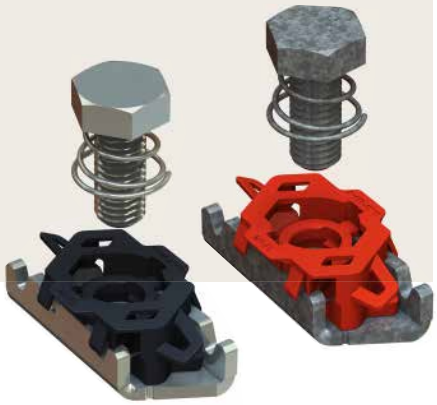

DESIGNED TO PERFORM

Discover the flexibility of our latest innovation in C-Channel connectivity: The MT System is designed to adapt to your needs seamlessly.

SERRATION ON THE SPOT

Hilti MT-TL Twist-Lock channel nuts create their own serration during torquing, making it one of the first seamless C-Channel fixation methods with shear capacity.

Universal

Serration is created on the spot, thus eliminating the need for preformed serrations in the channel. Known restrictions of positioning steps (typically 2 mm) due to serrations become obsolete.

Reliable

Mechanical connection of the MT-TL is realized without reliance on friction, thus providing the required shear capacity for C-Channel connections.

Adjustable

Releasing, repositioning, and subsequent retorquing of elements fixed with MT-TL remains fully enabled.

Fast and easy

During installation, connection elements can be intuitively positioned and locked in place.

Twist-Lock innovation

Hilti MT-TL channel nuts can be installed with a one-handed “twist and lock” into position. A groove is cut into the channel, allowing for rapid and accurate placement of components. During installation, Twist-Locks do not slip before final torquing.

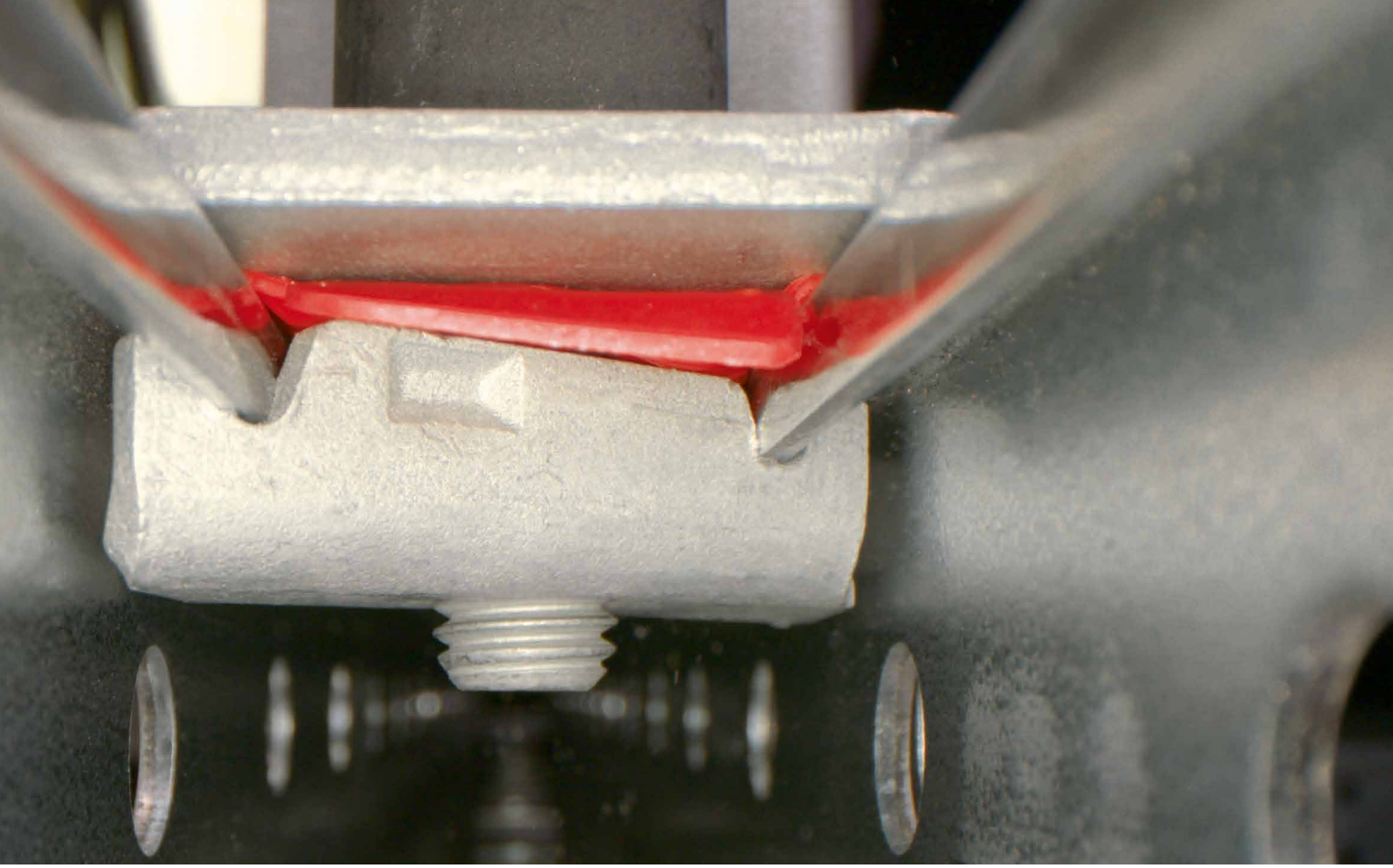

ADVANCED CORROSION PROTECTION

The MT System is designed to last in both indoor and low-to-moderate outdoor pollution conditions thanks to advanced corrosion protection technologies.

Performs under most conditions

For indoor usage, Hilti's established high-quality protection is used: Profiles are Sendzimir galvanized, connectors and baseplates are zinc electroplated.

Solutions designed for outdoor use combine hot-dip galvanization for components (such as connectors and baseplates) and zinc-magnesium galvanization (ZM technology) for profiles. ZM profiles conform to the ASTM A1046 and EN 10346 standards.

Breakthrough coating technology

The Zinc Magnesium (ZM) corrosion protection combines robustness and longevity with increased environmental sustainability and cost optimization.

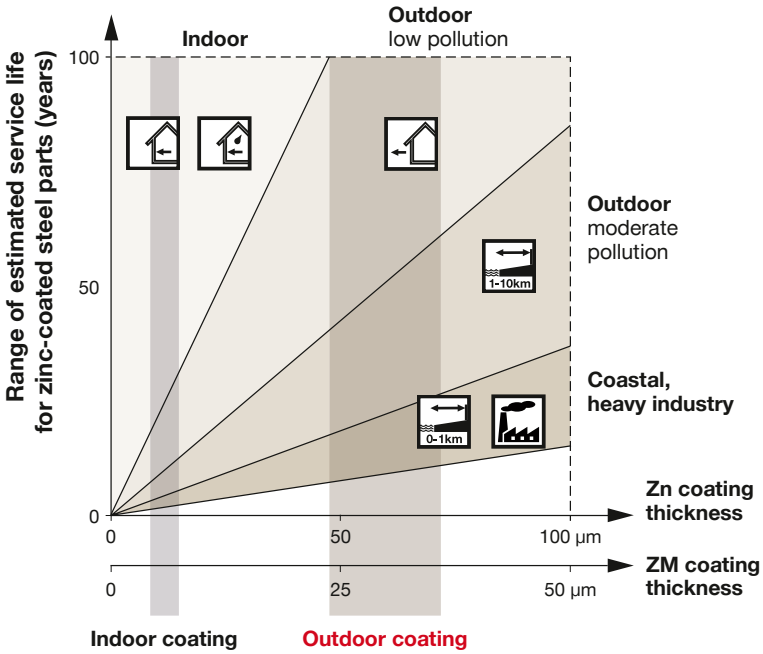

EVALUATIONS OF TECHNICAL DATA

Technical data herein is based on analytical calculations, finite element analysis or laboratory testing based on the provisions of Eurocodes EN 1990 and EN 1993.

Analytical Calculations

Analytical calculations for the design of joints as per EN 1993-1-8 are considered for the connector base material as well as bolted and welded connections.

Finite Element Analysis

In line with EN 1993-1-5, finite element analysis is an established alternative method for obtaining resistance data. Such analyses with shell and/or solid finite element models are performed to derive technical data for connector components contained herein. State-of-the-art software and modelling technics considering geometrical and material non-linearities as per EN 1993-1-5 are applied. The final resistance data herein considers the serviceability limit state (deformation) as well as the ultimate limit state (stress/strain and stability).

Testing

Structural performance via testing and evaluation is required when the strength of an element, connection, or assembly cannot be determined per the provisions of the Eurocode EN 1993. Moreover, they are performed to calibrate and validate finite element analysis and typically set the basis for connector load data in the most applicaton relevant load directions. The assessment of laboratory tests is following the boundary conditions and statistical rules of EN 1990 Annex D.

SAFETY CONCEPT

On design and recommended resistance

- The design resistance of the products (X_d) in this document is defined in accordance with EN1993
  - EN1993 partial safety factors for resistance (γ_M) are included
  - Deformation limit is considered when defining the resistance

- **All the resistances stated in this document are recommended values (X_r)**
  - Recommended values are always calculated from the design load via a Hilti concept safety factor (γ_{Hilti})

$$X_r = \frac{X_d}{\gamma_{Hilti}}$$

  - γ_{Hilti} includes the action partial safety factors, as per EN1990. This is a HILTI concept
  - The value of γ_{Hilti} can vary from one part to another. It can be 1.4 or 1.5.

- From the chart below it is noted that the comparison of “Recommended resistance” shall always be made with „Unfactored load*”, and “Design resistance” with “Design load”

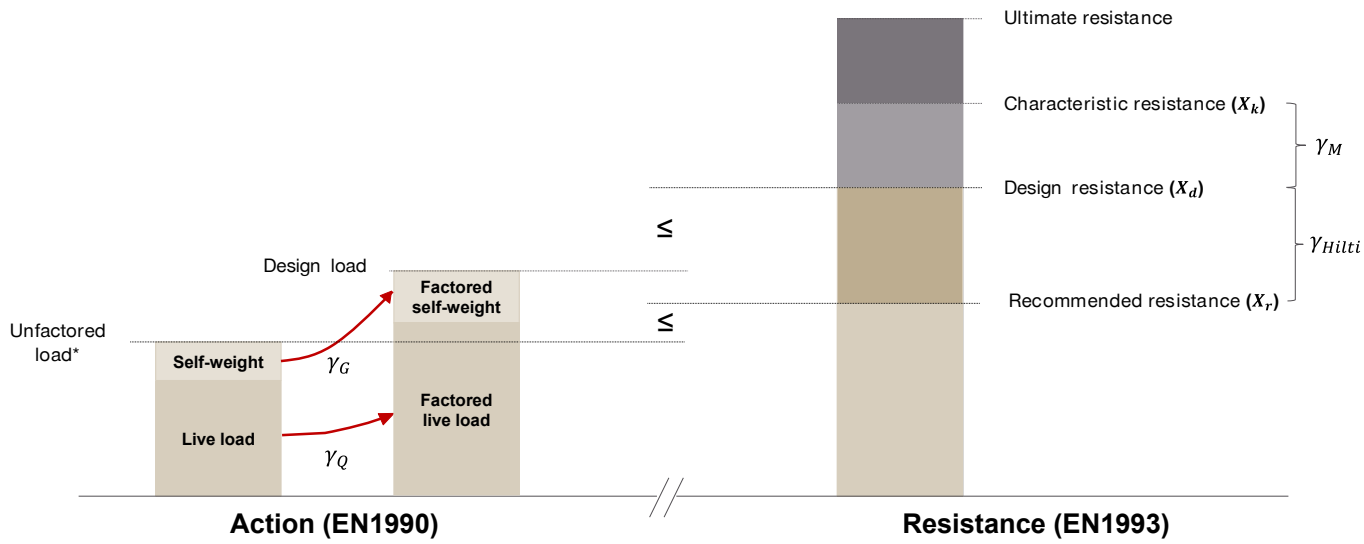

* It is noted that in EN1990 this is defined as «Characteristic load», i.e., the main representative value of a load. To enable an easier understading of Hilti’s safety concept, it is renamed to «Unfactored load» to highlight that it means weight of applied load without partial safety factors applied on top.

GENERAL INFORMATION TO CORROSION PROTECTION

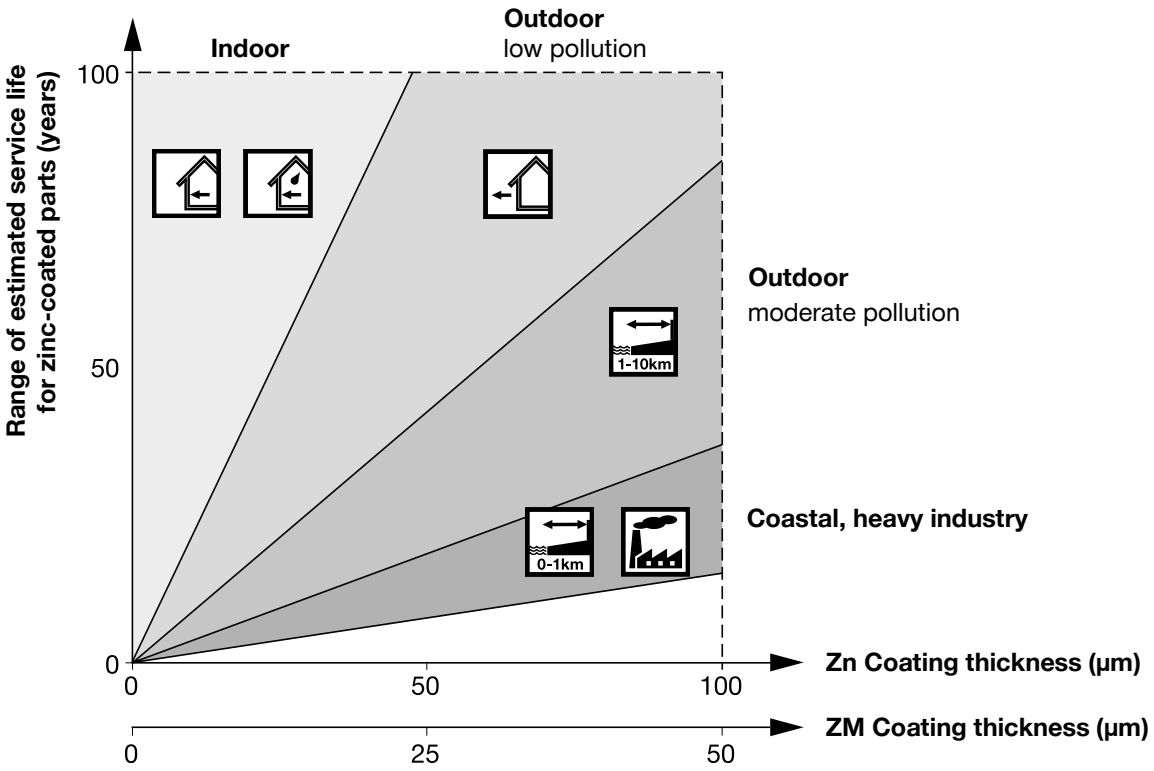

HILTI CORROSION RESISTANCE			
Hilti Corrosion Resistance	INDOOR COATED	OUTDOOR COATED	OUTDOOR PLUS
Corrosion class/ min. lifetime	C1 > 50 years C2 > 20 years	C3 > 25 years C4 > 15 years	C5 > 15 years (ask expert)
Corrosion environment	low-moderate	moderate-high	high-extreme

Hilti's installation systems are supplied in various coating technologies to meet the requirements under almost all conditions:

Hilti System	Indoor coated	Outdoor coated		Outdoor Plus	
	Zn	HDG Zn	HDG ZM	S A2	S A4
MT-Profiles	X		X		
MT-Components	X	X			

The typical lifetime expectancy of Hilti's installation systems is shown in the table below:

		Indoor coated	Outdoor coated		Outdoor Plus	
Installation systems	**Channel system**	MT, MQ, MM, MC	MT-OC, MQ-F, MQ ASTM, MC-OC, MI, MIQ		MQ system stainless A2/ AISI 304	MQ system stainless A4/ AISI 316
	Pipe fastening	Indoor pipe clamps[1]	Outdoor pipe clamps[2]	MP-UB OC, MP-US OC, MP-PS	Outdoor Plus pipe clamps[3]	
Environmental conditions		**lifetime (in years)**				
Dry indoor		50–100	100		■	■
Indoor with temporary condensation		25–70	50–100		■	■
Outdoor with low pollution		5–10	25–70		■	■
Outdoor with moderate concentration of pollutants (1-10km)		–	15–40		■	■
Coastal areas (0-1km)		–	5–20		–	■
Outdoor, areas with heavy industrial pollution		–	5–20		–	■
Close proximity to roads		–	–		–	■
Special applications		**Consult experts**				

■ = expected lifetime of an installation system made from this material is typically satisfactory in the specified environment based on the typically expected lifetime of a building.

1) Indoor pipe clamps: MP-L-I, MP-H, MP-HI, MP-P, MP-PI MP-U, MP-U-I, MP-U-G, MP-M, MP-MI, MP-MIS, MP-MX, MP-MXI, MRP-C, MIP, MRP-KF, MP-KF 170, MI-CF, MP-MS, MP-SPN, LH, SDC, MV-P, MV-PI, MV-PIF, MP-UB

2) Outdoor pipe clamps: MP-PI-HDG, MP-M-F, MP-MI-F, MP-MX-F, MP-MX-F

3) Outdoor PLUS pipe clamps: MP-SRN, MP-SRNI, MPN-R, MP-MR, MP-MRI, MP-MRXI

1

MT-FL Fast-Lock Channel nut with bolt

Fast-Lock Channel nut with bolt for attaching baseplates and connectors to MT C-Channels

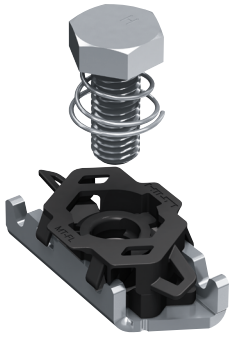

Applications

- Connecting all compatible hardware to MT C-Channels
- Connection element for U-frame/crossbeam structures
- Assembling MEP support structures using MT C-Channels
- Suitable for use in dry, indoor environments

Order Designation	Technical data	Sales pack quantity	Item number
MT-FL	Dry indoor conditions (C1) Indoor with temporary condensation (C2)	50 pc	**2399683**

Advantages

- Faster connections and adjustments – one-handed push-and-turn connections and one-click position adjustments allow you to assemble modular support systems much faster than standard spring nuts
- Simple to adjust – Fast-Lock nuts are re-adjustable and can be easily disassembled so you can modify C-Channel framing during installation
- Safety features – designed so you can see, hear, and feel correct Channel nut positioning, with pre-holding function to hold connector in place as soon as the mechanism is activated
- Reliable connections – strong mechanical fixation to the Channel flanges provides high shear and pull-out resistance
- Part of the Hilti MT system – an economical, all-in-one solution for virtually all modular MEP support structures
- Extensive software support - PROFIS Modular Support Engineering, BIMCAD content, and Revit® families are all available to streamline design and ordering
- Compatible with the Hilti Adaptive Torque system – use a cordless impact wrench to quickly tighten nuts to the correct pretension (compatible tool and SI-AT module required)

MT-FL OC Fast-Lock Channel nut with bolt

Fast-Lock Channel nut with bolt for attaching baseplates and connectors to MT C-Channels, for outdoor use with low pollution

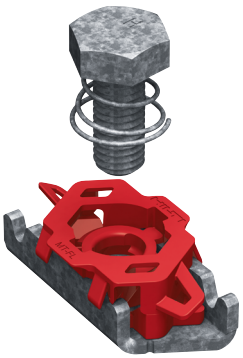

Applications

- Connecting all compatible hardware to MT C-Channels
- Connection element for U-frame/crossbeam structures
- Assembling MEP support structures using MT C-Channels
- Suitable for use in moderately corrosive environments

Order Designation	Technical data	Sales pack quantity	Item number
MT-FL OC	Outdoor, low to moderate pollution (C3 / C4 - low)	50 pc	**2399682**

Advantages

- Faster connections and adjustments – one-handed push-and-turn connections and one-click position adjustments allow you to assemble modular support systems much faster than standard spring nuts
- Simple to adjust – Fast-Lock nuts are re-adjustable and can be easily disassembled so you can modify C-Channel framing during installation
- Safety features – designed so you can see, hear, and feel correct Channel nut positioning, with pre-holding function to hold connector in place as soon as the mechanism is activated
- Reliable connections – strong mechanical fixation to the Channel flanges provides high shear and pull-out resistance
- Part of the Hilti MT system – an economical, all-in-one solution for virtually all modular MEP support structures
- Extensive software support - PROFIS Modular Support Engineering, BIMCAD content, and Revit® families are all available to streamline design and ordering
- Compatible with the Hilti Adaptive Torque system – use a cordless impact wrench to quickly tighten nuts to the correct pretension (compatible tool and SI-AT module required)

1

MT-TL Twist-Lock Channel Nut

Nut for attaching media to MT open C-Channels

Applications

- Connecting all compatible hardware to MT C-Channels
- Assembling shear-resistant metal framing for MEP support structures using MT C-Channels (M10 version only)
- Suitable for use in dry, indoor environments

Advantages

- Part of the Hilti MT system – an economical, all-in-one solution for virtually all modular MEP support structures
- High shear and pull-out resistance provided by a reliable mechanical fixation to the Channel flanges
- Easy to install – insert into C-Channel using a one-handed “push-and-twist” motion
- Adaptable – unlike welding, Twist-Locks allow you to modify C-Channel framing during installation and for future MEP requirements
- Compatible with MT System C-Channels – no need for serrations on the Channel flanges
- Compatible with the Hilti Adaptive Torque system – use a cordless impact wrench to quickly tighten nuts to the correct pretension (compatible tool and SI-AT module required)

MT-TL Twist-Lock Channel Nut
M6 / M8 / M10 / M12 / M16 / 1/2 / 3/8

Order Designation	Technical data	Sales pack quantity	Item number	
MT-TL 1/4	Dry indoor conditions (C1) Indoor with temporary condensation (C2)	50 pc	**2388023**	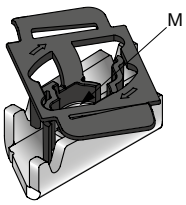
MT-TL M6		50 pc	**2343283**	
MT-TL M8		30 pc	**2273630**	
MT-TL M10		30 pc	**2272080**	
MT-TL M12		30 pc	**2273632**	
MT-TL M16		30 pc	**2273634**	
MT-TL 1/2		30 pc	**2273638**	
MT-TL 3/8		50 pc	**2273636**	
MT-TL 5/8		30 pc	**2388025**	

1

MT-TL OC Twist-Lock Channel Nut

Nut for attaching media to open C-Channel - outdoor

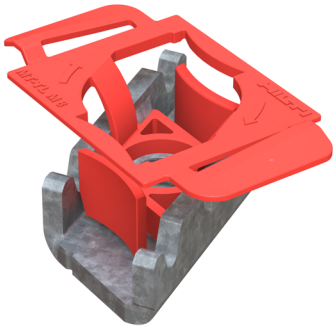

Applications

- Connecting all compatible hardware to MT C-Channels
- Assembling shear-resistant metal framing for MEP support structures using MT C-Channels (M10 version only)
- Suitable for use in moderately corrosive environments

Advantages

- Part of the Hilti MT system – an economical, all-in-one solution for virtually all modular MEP support structures
- High shear and pull-out resistance provided by a reliable mechanical fixation to the Channel flanges
- Easy to install – insert into C-Channel using a one-handed “push-and-twist” motion
- Adaptable – unlike welding, Twist-Locks allow you to modify C-Channel framing during installation and for future MEP requirements
- Compatible with MT System C-Channels – no need for serrations on the Channel flanges
- Compatible with the Hilti Adaptive Torque system – use a cordless impact wrench to quickly tighten nuts to the correct pretension (compatible tool and SI-AT module required)

MT-TL Twist-Lock Channel Nut - Outdoor M6 / M8 / M10 / M12 / M16 / 1/2 / 3/8 OC

Order Designation	Technical data	Sales pack quantity	Item number	
MT-TL 1/4 OC	Outdoor, low to moderate pollution (C3 / C4 - low)	50 pc	**2388024**	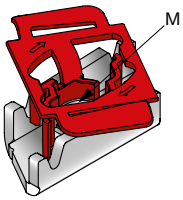
MT-TL M6 OC		50 pc	**2343284**	
MT-TL M8 OC		30 pc	**2273631**	
MT-TL M10 OC		30 pc	**2272082**	
MT-TL M12 OC		30 pc	**2273633**	
MT-TL M16 OC		30 pc	**2273635**	
MT-TL 1/2 OC		30 pc	**2273639**	
MT-TL 3/8 OC		50 pc	**2273637**	
MT-TL 5/8 OC		30 pc	**2388026**	

MT-TLB Twist-Lock Bolt

Hexagon-head bolt for use with Twist-Locks when assembling open C-Channel structures

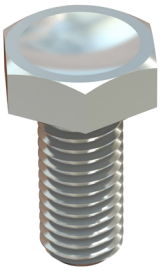

Applications

- Connecting all compatible hardware to MT C-Channel
- Assembling shear-resistant metal framing for MEP support structures using MT C-Channels
- Suitable for use in dry, indoor environments

Advantages

- Easy to install – compatible with the Hilti MT Twist-Lock, a faster alternative to spring nuts for assembling a modular support system
- Compatible with the Hilti Adaptive Torque system – use a cordless impact wrench to quickly tighten bolts to the correct pretension (compatible tool and SI-AT module required)

Technical data

Material composition	ISO 898-1 8.8
Surface finish	Indoor Coated - Electro Galvanized

MT-TLB Twist-Lock Bolt

Order Designation	Technical data	Sales pack quantity	Item number	
MT-TLB	Dry indoor conditions (C1) Indoor with temporary condensa-tion (C2)	200 pc	**2273254**	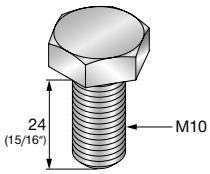
MT-TLB 30		200 pc	**2282190**	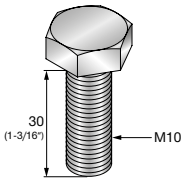

MT-TLB OC Twist-Lock Bolt - Outdoor

Hexagon bolt for use with Twist-Locks when assembling open C-Channel structures for outdoor use with low pollution

Applications

- Connecting all compatible hardware to MT C-Channel
- Assembling shear-resistant metal framing for MEP support structures using MT C-Channels
- Suitable for use in moderately corrosive environments

Advantages

- Easy to install – compatible with the Hilti MT Twist-Lock, a faster alternative to spring nuts for assembling a modular support system
- Compatible with the Hilti Adaptive Torque system – use a cordless impact wrench to quickly tighten bolts to the correct pretension (compatible tool and SI-AT module required)

Technical data

Material composition	ISO 898-1 8.8
Surface finish	Multi-layer coating, designed for corrosion environment category C3 according ISO 9223

MT-TLB OC Twist-Lock Bolt - Outdoor

Order Designation	Technical data	Sales pack quantity	Item number	
MT-TLB OC	Outdoor, low to moderate pollution (C3 / C4 - low)	200 pc	**2273256**	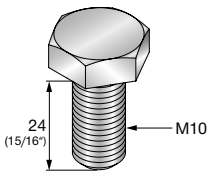
MT-TLB 30 OC		200 pc	**2282191**	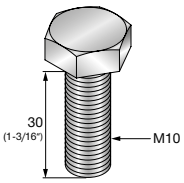

MT-TFB OC Thread Forming Bolt

Thread-forming bolt for use when assembling MT box profile structures

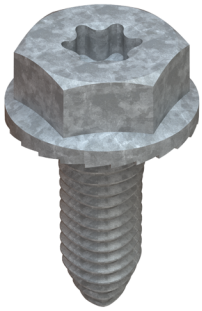

Applications

- Connecting all compatible hardware to MT box profiles
- Assembling metal framing for MEP support structures by fixing compatible MT connectors
- Direct attachment of MT profiles and Channels to MT box profiles, or any MT box profile to MT-80

Advantages

- Part of the Hilti MT system – an economical, all-in-one solution for virtually all modular MEP support structures
- One-step installation – no nut required
- Compatible with the Hilti Adaptive Torque system – use a cordless impact wrench to quickly tighten bolts to the correct pretension (compatible tool and SI-AT module required)
- Versatile – suitable for all MT girders and connection hardware

Technical data

Material composition	High Strength Steel
Surface finish	Outdoor Coated - Multilayer

MT-TFB OC Thread Forming Bolt - Outdoor

Order Designation	Technical data	Sales pack quantity	Item number	
MT-TFB OC	Outdoor, low to moderate pollution (C3 / C4 - low)	250 pc	**2272084**	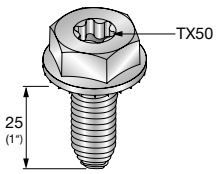

MT-THB OC Connection Mechanisms

T-head bolt for fastening connectors and other construction elements into the mounting slot of MT Seamless Box Profiles in moderately corrosive environments

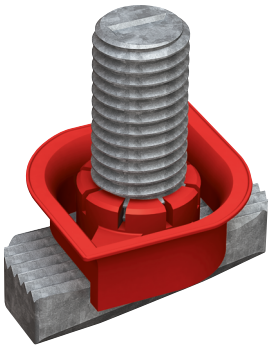

Applications

- Simple but secure bolt for fastening connectors and other construction elements to MT profiles
- Optional M12x33 version for overhead grid applications
- Multidisciplinary MEP support structures combining a wide range of media such as air ducts, cable trays, piping, etc.
- Ceiling-mounted MEP support structures with heavy loads such as ceiling grids and utility piping and drainage
- Integrated modules and skids to support industrial pipes and other heavy-duty building services

Advantages

- Simple to adjust – can be inserted and adjusted at any point along the profile, with 2.5 mm (1/8”) incremental adjustments
- Faster to install – switch between MT Thread Forming Bolts (MT-TFB) and MT T-head bolts (MT-THB) without interruption, thanks to matching socket size and AT-Module torque parameters
- Reduced complexity – designed as a single piece and in one standard size for all structural connections, for easier purchasing, handling, and storage
- Reliable connections – compatible with the Hilti Adaptive Torque system for tightening bolts to the correct pretension (compatible tool and SI-AT module required)

Technical data

Material composition	High Strength Steel
Surface finish	Outdoor Coated - Multilayer

MT-THB OC Connection Mechanism

Order Designation	Technical data	Length - L	Sales pack quantity	Item number	
MT-THB OC	Outdoor, low to moderate pollution (C3 / C4 - low)	22 mm	20 pcs	**2431080**	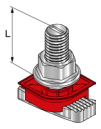
MT-THB M12x33 OC		33 mm	20 pcs	**2431092**	

1

Operation Instruction

MT-FL / MT-FL OC

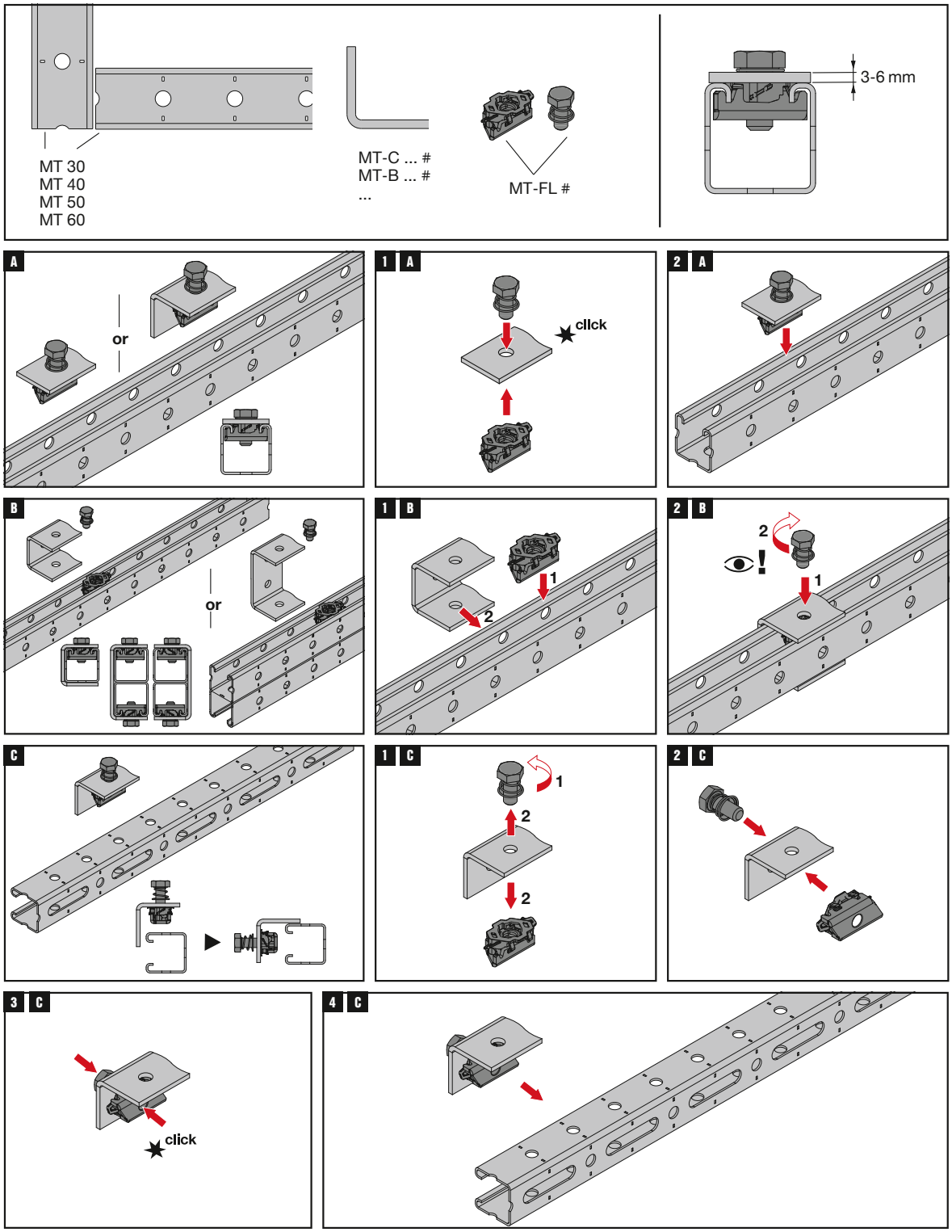

The latest IFU (Instruction For Use) is available on Hilti Online. Please check for any revisions before installing the product.

MT-TL Twist-Lock Channel Nut

1

Operation instruction

MT-TL M6 / MT-TL 1/4“ / MT-TL M6 OC / MT-TL 1/4“ OC

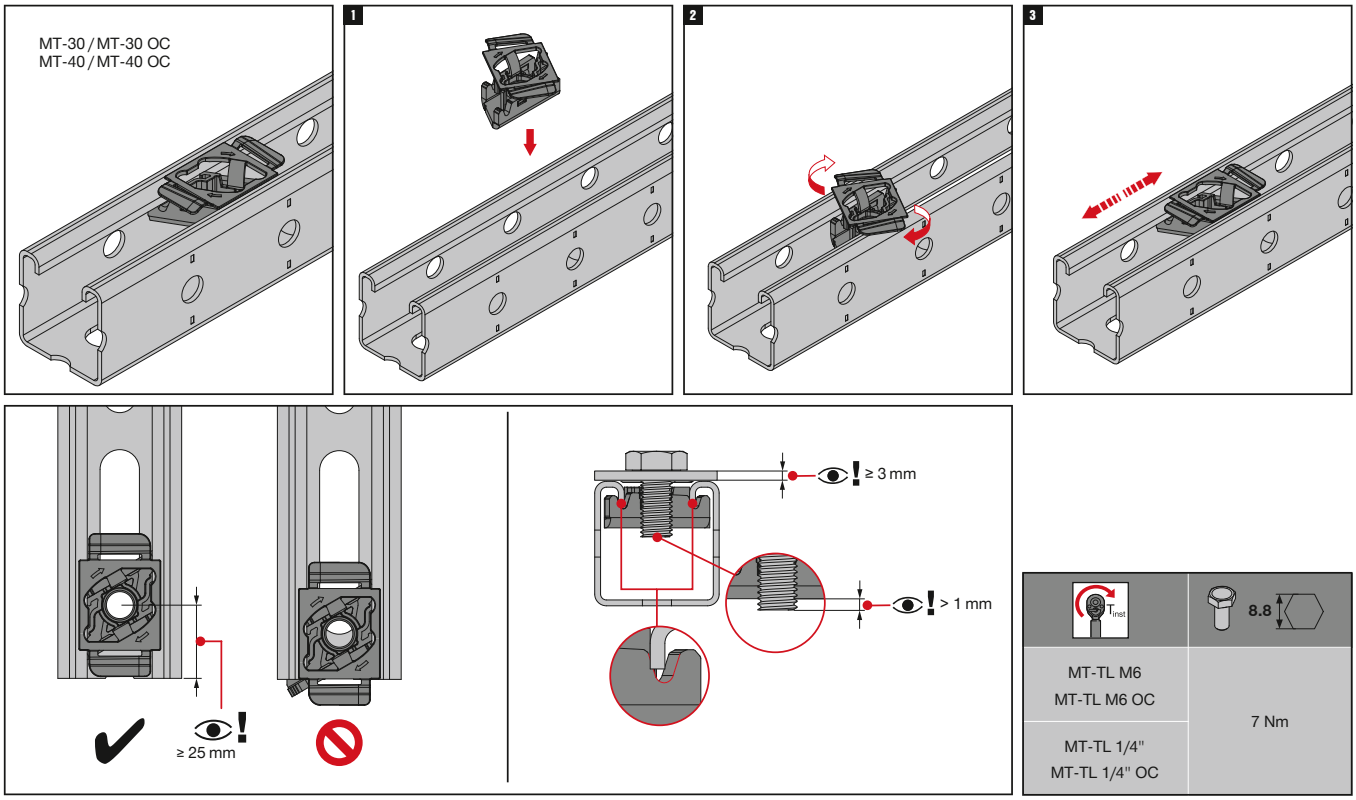

T_{inst}	8.8
MT-TL M6 MT-TL M6 OC	7 Nm
MT-TL 1/4" MT-TL 1/4" OC	

The latest IFU (Instruction For Use) is available on Hilti Online. Please check for any revisions before installing the product.

Operation instruction

MT-TL M8 / MT-TL M8 OC / MT-TL ⅜" / MT-TL ⅜“ OC / MT-TL M10 / MT-TL M10 OC

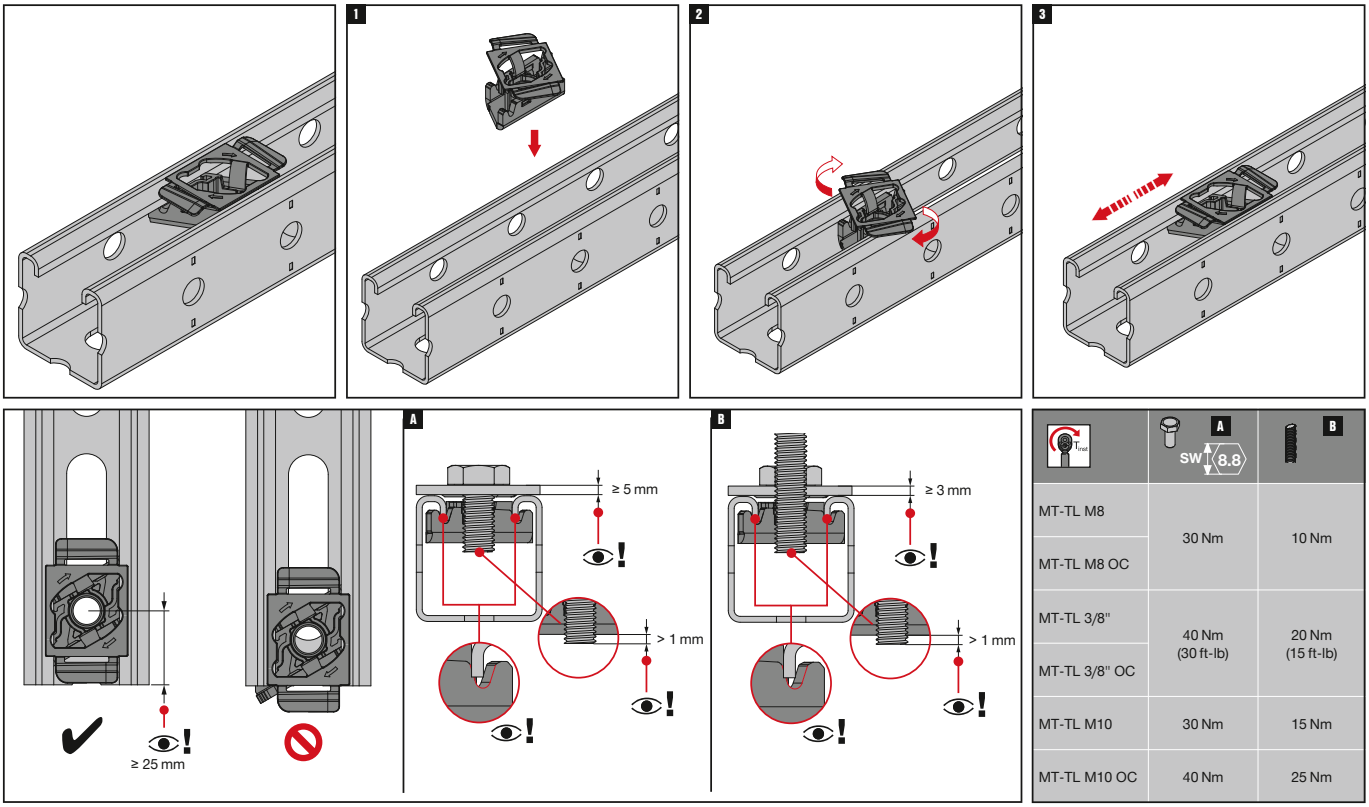

T_{inst}	A SW 8.8	B
MT-TL M8	30 Nm	10 Nm
MT-TL M8 OC		
MT-TL 3/8"	40 Nm (30 ft-lb)	20 Nm (15 ft-lb)
MT-TL 3/8" OC		
MT-TL M10	30 Nm	15 Nm
MT-TL M10 OC	40 Nm	25 Nm

The latest IFU (Instruction For Use) is available on Hilti Online. Please check for any revisions before installing the product.

MT-TL Twist-Lock Channel Nut

1

MT-TL M10 / MT-ML M10 OC

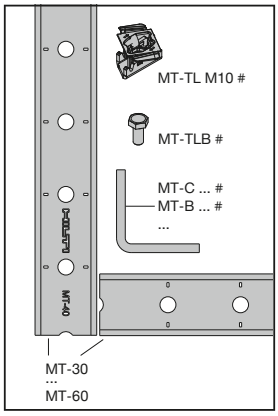

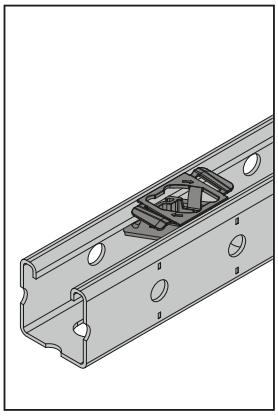

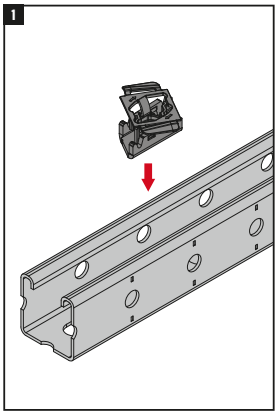

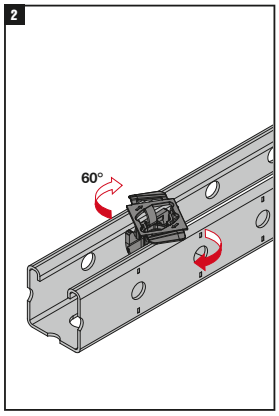

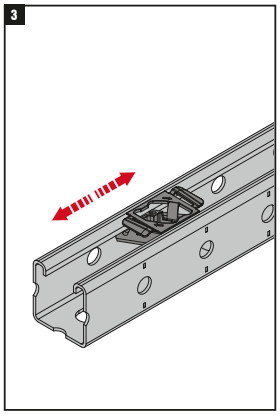

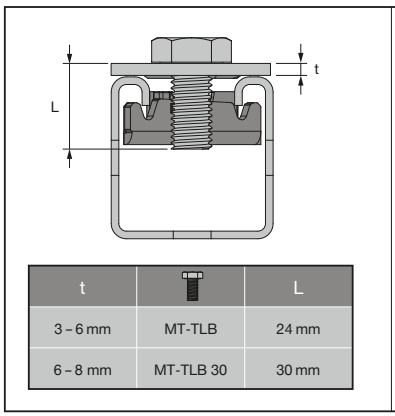

t		L
3 – 6 mm	MT-TLB	24 mm
6 – 8 mm	MT-TLB 30	30 mm

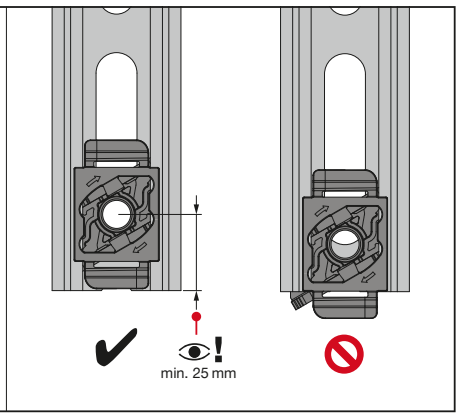

	MT-TLB / MT-TLB 30
MT-TL M10	T_{inst} 30 Nm (22 ft-lb)

SI-AT-A22
SI-AT-22

	MT-TLB OC / MT-TLB 30 OC
MT-TL M10 OC	T_{inst} 40 Nm (30 ft-lb)

SI-AT-A22
SI-AT-22

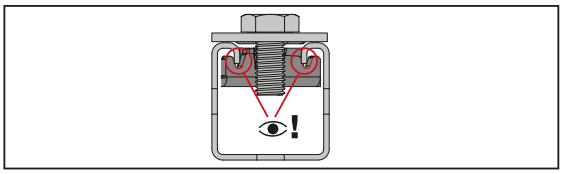

The latest IFU (Instruction For Use) is available on Hilti Online. Please check for any revisions before installing the product.

MT-TL M12 OC / MT-TL M16 OC / MT-TL M½" OC / MT-TL ⅝" OC

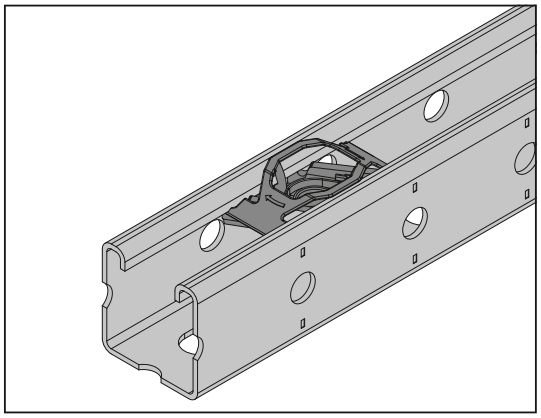

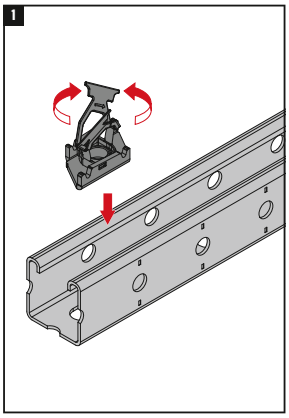

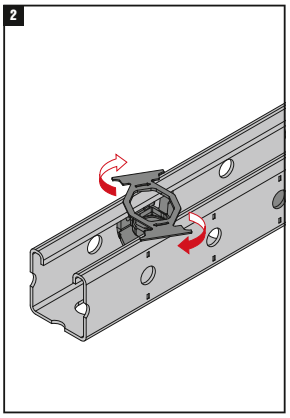

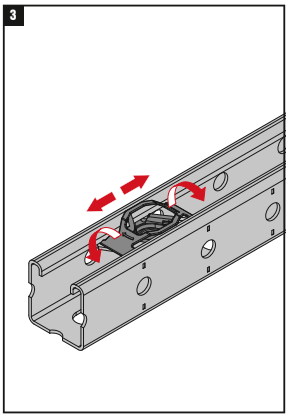

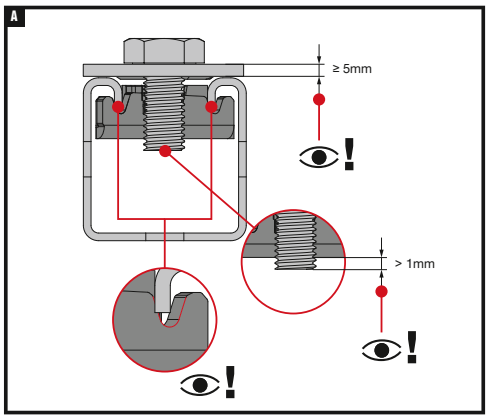

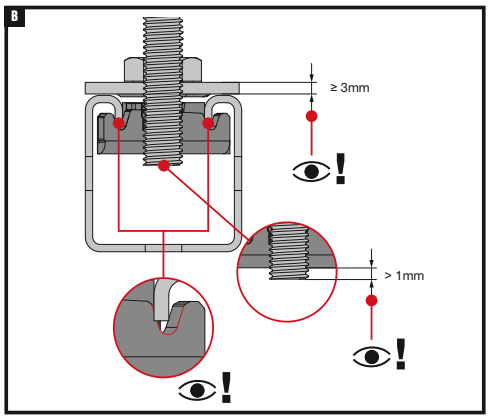

T_{inst}	A SW 8.8	B
MT-TL M12	60 Nm (44 ft-lb)	30 Nm (22 ft-lb)
MT-TL M½		
MT-TL M12 OC		
MT-TL M½ OC		
MT-TL M16	90 Nm (66 ft-lb)	50 Nm (37 ft-lb)
MT-TL M⅝		
MT-TL M16 OC		
MT-TL M⅝ OC		

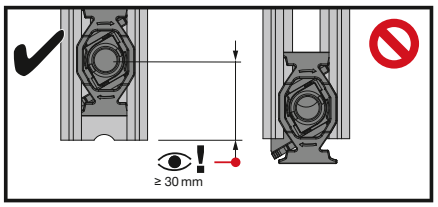

The latest IFU (Instruction For Use) is available on Hilti Online. Please check for any revisions before installing the product.

1

MT Box profiles Connectors

90° Connectors - Outdoor

Operation Instruction

MT-THB OC

2436930-04.2024

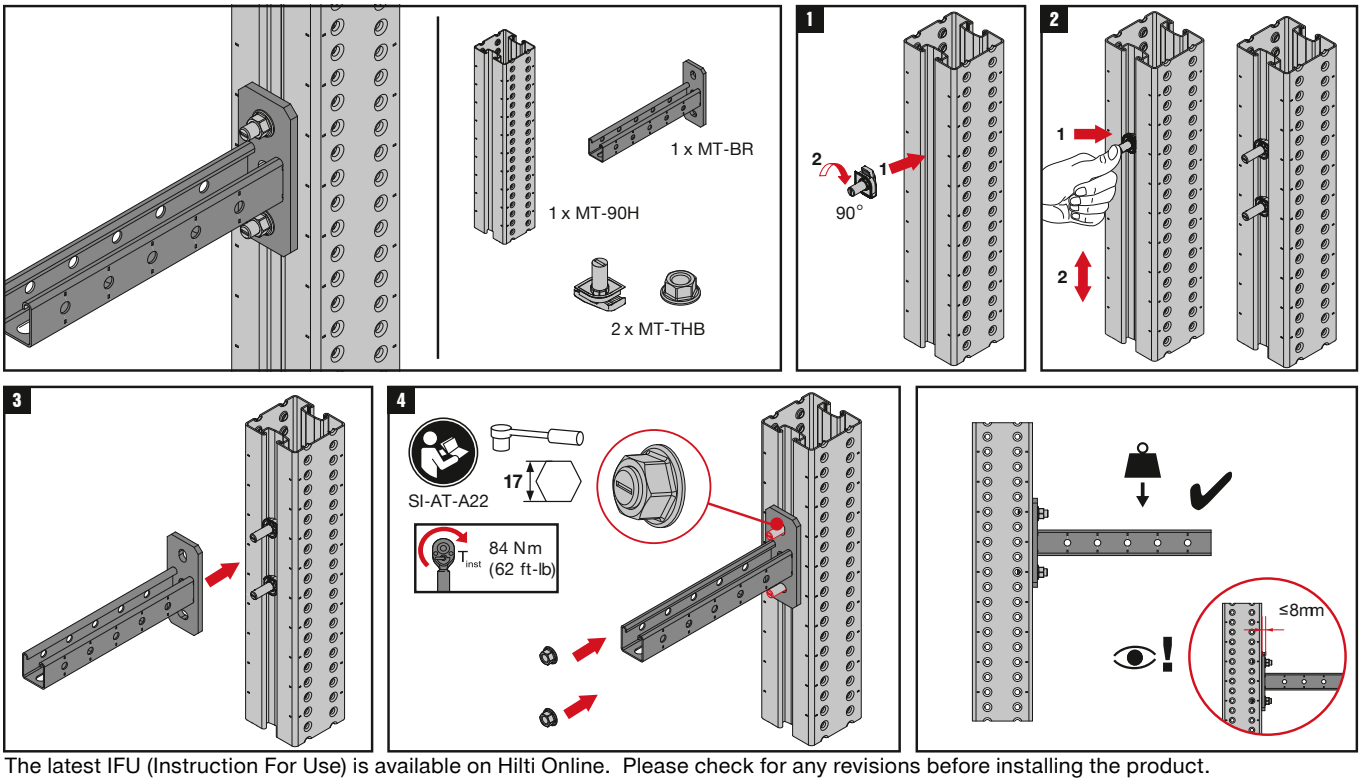

The latest IFU (Instruction For Use) is available on Hilti Online. Please check for any revisions before installing the product.

MT-TFB

2294557-08.2022

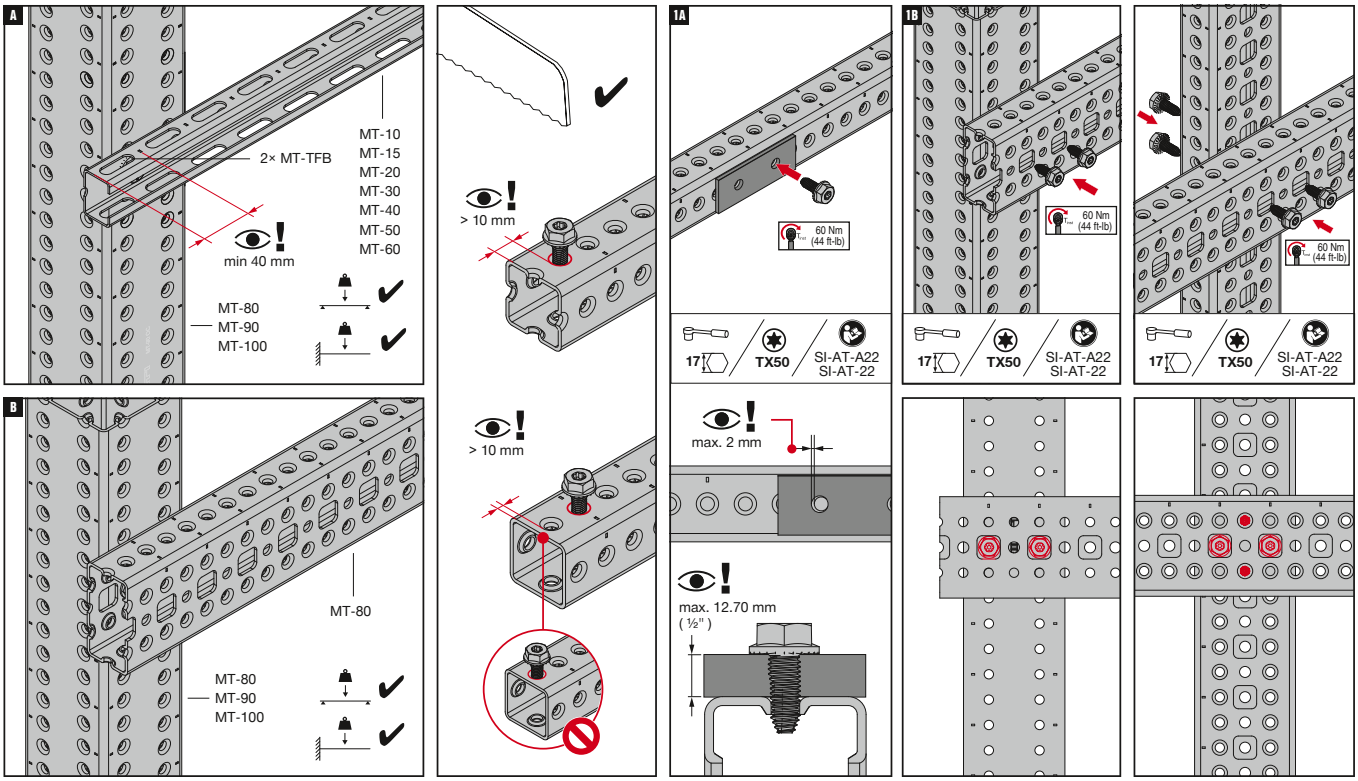

The latest IFU (Instruction For Use) is available on Hilti Online. Please check for any revisions before installing the product.

MT Trapeze Profiles

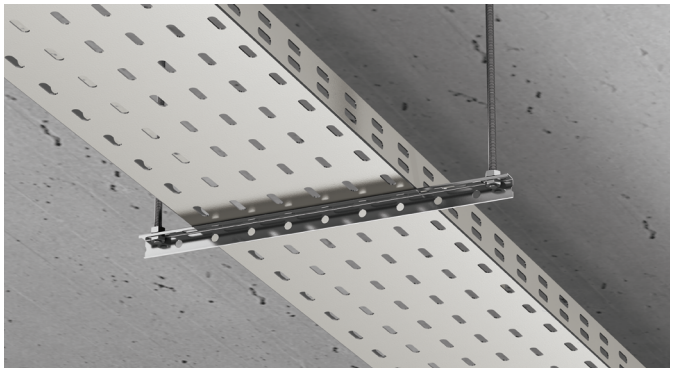

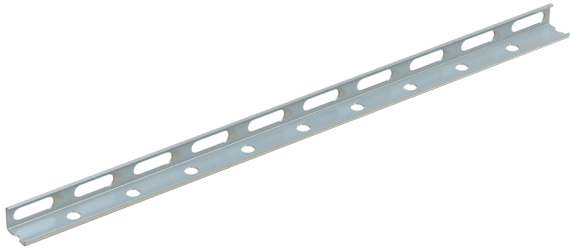

Applications

- Trapeze Channel to support pipes, ducts and cable trays in dry, indoor environments
- Suitable for use in dry, indoor environments

Technical data

Material composition	S280GD or better steel
Surface finish	Indoor Coated - Pre-galvanized (Z275)

Advantages

- Economical – high load/weight ratio and rapid assembly make MT trapeze profile a more efficient alternative to welded MEP support structures
- Complexity kept to the minimum – optimizing logistical and on-site operations, as well as providing simplicity in installation
- Economical solution for simple threaded rod trapeze frames
- Fully compatible with the MT System – direct mounting on MT girders possible

MT-10 Trapeze Profile

Order Designation	Technical data	Sales pack quantity	Item number	
MT-10	Dry indoor conditions (C1) Indoor with temporary condensation (C2)	1x 2 m	**2268492**	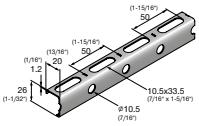
MT-10 S		1x 3 m	**2360728**	

MT-15 Trapeze Profile

Order Designation	Technical data	Sales pack quantity	Item number	
MT-15	Dry indoor conditions (C1) Indoor with temporary condensation (C2)	1x 2 m	**2268493**	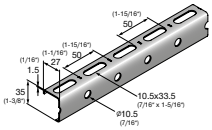
MT-15 S		1x 3 m	**2360729**	

2

MT-20 Trapeze Profile

Order Designation	Technical data	Sales package quantity	Item number	
MT-20	Dry indoor conditions (C1) Indoor with temporary condensation (C2)	1x 2 m	**2268495**	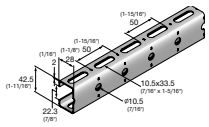
MT-20 S		1x 3m	**2360921**	

MT-40 T Trapeze Profile

Order Designation	Technical data	Sales package quantity	Item number	
MT-40 T S	Dry indoor conditions (C1) Indoor with temporary condensation (C2)	1x 3 m	**2360923**	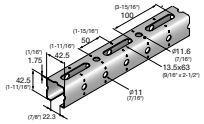
MT-40 T		1x 6 m	**2268502**	

MT Trapeze Profiles - Outdoor

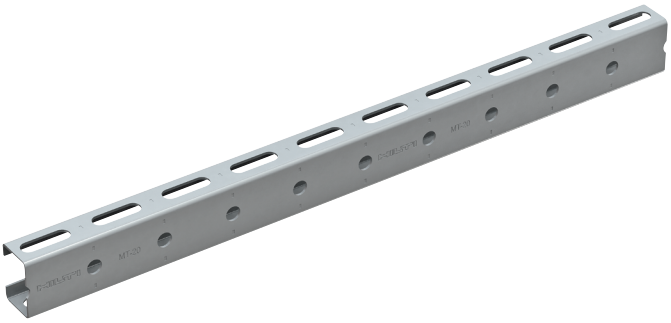

Applications

- Trapeze Channel to support pipes, ducts and cable trays
- Suitable for use in moderately corrosive environments

Advantages

- Economical – high load/weight ratio and rapid assembly make MT C-Channel a more efficient alternative to welded MEP support structures
- Complexity kept to the minimum – optimizing logistical and on-site operations, as well as providing simplicity in installation
- Economical solution for threaded rod trapeze frames

Technical data

Material composition	S280GD or better
Surface finish	Zinc-Magnesium (ZM310)- for outdoor use

MT-15 OC Trapeze Profile - Outdoor

Order Designations	Technical data	Sales pack quantity	Item number	
MT-15 OC	Outdoor, low to moderate pollution (C3 / C4 - low)	1x 2 m	**2268494**	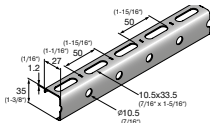
MT-15 S OC		1x 3m	**2360920**	

MT-20 OC Trapeze Profile - Outdoor

Order Designation	Technical data	Sales pack quantity	Item number	
MT-20 OC	Outdoor, low to moderate pollution (C3 / C4 - low)	1x 2 m	**2268496**	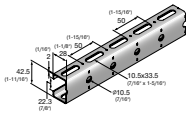
MT-20 S OC		1x 3 m	**2360922**	

MT-40 T OC Trapeze Profile - Outdoor

Order Designation	Technical data	Sales pack quantity	Item number	
MT-40 T S OC	Outdoor, low to moderate pollution (C3 / C4 - low)	1x 3 m	**2360924**	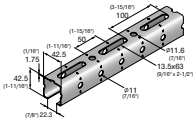
MT-40 T OC		1x 6 m	**2268504**	

MT Open C-Channels

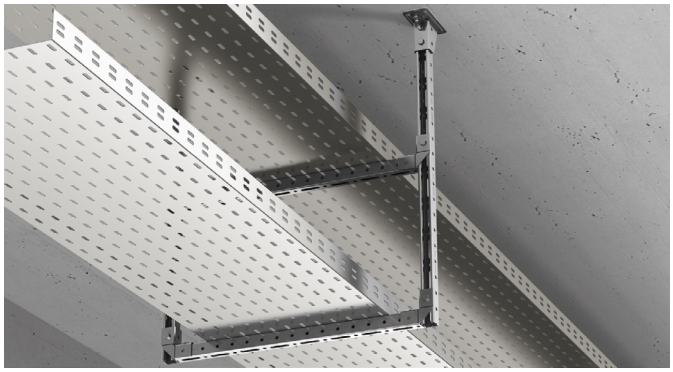

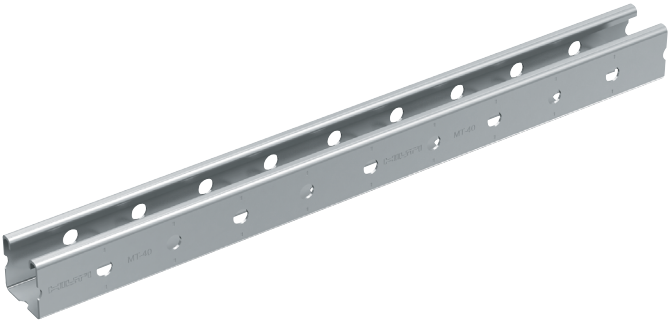

Applications

- Floor-mounted MEP support structures with lighter loads and limited spans, such as goal post-type framing
- Ceiling-mounted MEP support structures with lighter loads and limited spans, such as suspended trapeze Channel frames
- Wall-mounted cantilever brackets for smaller pipes, ducts and cables

Technical data

Material composition	S280GD or better steel
Surface finish	Indoor Coated - Pre-galvanized (Z275)

Advantages

- Economical – high load/weight ratio and rapid assembly make MT C-Channel a more efficient alternative to welded MEP support structures
- Complexity kept to the minimum – optimizing logistical and on-site operations, as well as providing simplicity in installation
- Simpler to design – you can use Hilti MT components for all MEP installations from the lightest trapeze to the heaviest-duty modular framing
- Simpler to install – compatible with the innovative MT System Twist-Lock, enabling the use of a wide range of MT connectors and baseplates

MT-30 Open C-Channel

Order Designation	Technical data	Sales pack quantity	Item number	
MT-30 S	Dry indoor conditions (C1) Indoor with temporary condensation (C2)	1x 3 m	**2268497**	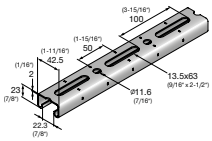
MT-30		1x 6 m	**2268498**	

MT-40 Open C-Channel

Order Designation	Technical data	Sales pack quantity	Item number	
MT-40 S	Dry indoor conditions (C1) Indoor with temporary condensation (C2)	1x 3 m	**2268505**	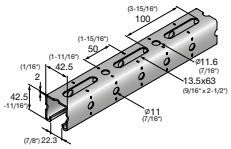
MT-40		1x 6 m	**2268506**	

MT Open C-Channels

2

MT-50 Open Channel

Order Designation	Technical data	Sales pack quantity	Item number	
MT-50 S	Dry indoor conditions (C1) Indoor with temporary condensation (C2)	1x 3 m	**2268509**	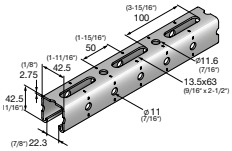
MT-50		1x 6 m	**2268510**	

MT-50U Open Channel

Order Designation	Technical data	Sales pack quantity	Item number	
MT-50U	Dry indoor conditions (C1) Indoor with temporary condensation (C2)	1x 6 m	**2362808**	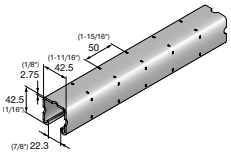

MT-60 Open C-Channel

Order Designation	Technical data	Sales pack quantity	Item number	
MT-60 S	Dry indoor conditions (C1) Indoor with temporary condensation (C2)	1x 3 m	**2268513**	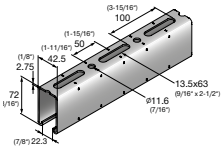
MT-60		1x 6 m	**2268514**	

MT Open C-Channels - Outdoor

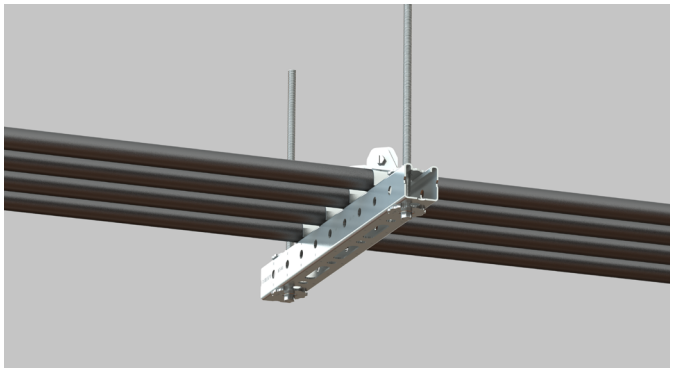

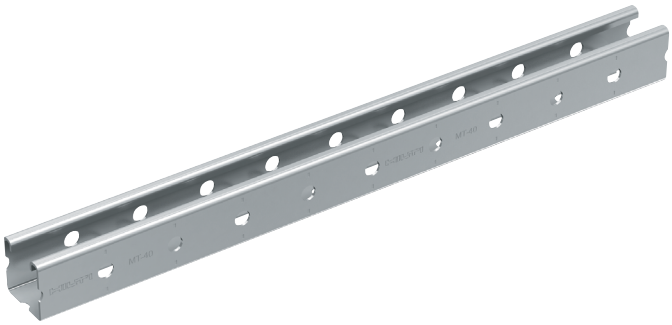

Applications

- Floor-mounted MEP support structures with lighter loads and limited spans, such as goal post-type strut framing
- Ceiling-mounted MEP support structures with lighter loads and limited spans, such as suspended strut trapeze frames
- Wall-mounted cantilever brackets for smaller pipes, ducts and cables

Technical data

Material composition	S280GD or better steel
Surface finish	Zinc-Magnesium (ZM310)- for outdoor use

Advantages

- Economical – high load/weight ratio and rapid assembly make MT C-Channel a more efficient alternative to welded MEP support structures
- Complexity kept to the minimum – optimizing logistical and on-site operations, as well as providing simplicity in installation
- Simpler to design – you can use Hilti MT components for all MEP installations from the lightest trapeze to the heaviest-duty modular framing
- Simpler to install – compatible with the innovative MT System Twist-Lock, enabling the use of a wide range of MT connectors and baseplates

MT-30 Open C-Channel - Outdoor

Order Designation	Technical data	Sales pack quantity	Item number	
MT-30 S OC	Outdoor, low to moderate pollution (C3 / C4 - low)	1x 3 m	**2268499**	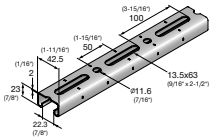
MT-30 OC		1x 6 m	**2268500**	

MT-40 Open C-Channel - Outdoor

Order Designation	Technical data	Sales pack quantity	Item number	
MT-40 S OC	Outdoor, low to moderate pollution (C3 / C4 - low)	1x 3 m	**2268507**	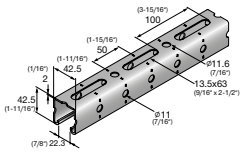
MT-40 OC		1x 6 m	**2268508**	

MT Open C-Channels - Outdoor

MT-50 Open C-Channel - Outdoor

Order Designation	Technical data	Sales pack quantity	Item number	
MT-50 S OC	Outdoor, low to moderate pollution (C3 / C4 - low)	1x 3 m	**2268511**	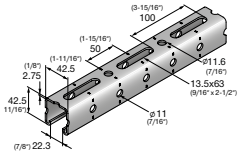
MT-50 OC		1x 6 m	**2268512**	

MT-60 Open C-Channel - Outdoor

Order Designation	Technical data	Sales pack quantity	Item number	
MT-60 S OC	Outdoor, low to moderate pollution (C3 / C4 - low)	1x 3 m	**2268515**	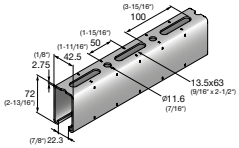
MT-60 OC		1x 6 m	**2268516**	

MT Open Double C-Channel

Applications

- Floor-mounted MEP support structures, such as goal post-type strut framing
- Ceiling-mounted MEP support structures, such as suspended trapeze Channel frames
- Wall-mounted cantilever brackets for heavier pipes

Technical data

Material composition	S280 or better steel
Surface finish	Indoor Coated - Pre-galvanized (Z275)

Advantages

- Economical – high load/weight ratio and rapid assembly make MT C-Channel a more efficient alternative to welded MEP support structures
- Complexity kept to the minimum – optimizing logistical and on-site operations, as well as providing simplicity in installation
- Simpler to design – you can use Hilti MT components for all MEP installations from the lightest trapeze to the heaviest-duty modular framing
- Simpler to install – compatible with the innovative MT System Twist-Lock, enabling the use of a wide range of MT connectors and baseplates

2

MT-30 Open Double C-Channel

Order Designation	Technical data	Sales pack quantity	Item number	
MT-30D S	Dry indoor conditions (C1) Indoor with temporary condensation (C2)	1x 3 m	**2362708**	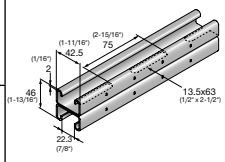
MT-30D		1x 6 m	**2362706**	

MT-40 Open Double C-Channel

Order Designation	Technical data	Sales pack quantity	Item number	
MT-40D S	Dry indoor conditions (C1) Indoor with temporary condensation (C2)	1x 3 m	**2268517**	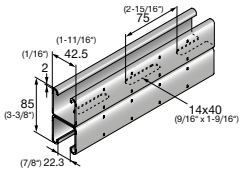
MT-40D		1x 6 m	**2268518**	

MT-50 Open Double C-Channel

Order Designation	Technical data	Sales pack quantity	Item number	
MT-50D S	Dry indoor conditions (C1) Indoor with temporary condensation (C2)	1x 3 m	**2362804**	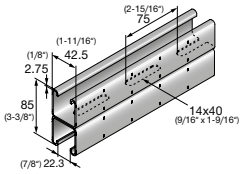
MT-50D		1x 6 m	**2362803**	

MT-50 U Open Double C-Channel

Order Designation	Technical data	Sales pack quantity	Item number	
MT-50D U	Dry indoor conditions (C1) Indoor with temporary condensation (C2)	1x 6 m	**2362807**	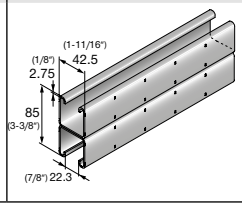

MT-60 Open Double C-Channel

Order Designation	Technical data	Sales pack quantity	Item number	
MT-60D S	Dry indoor conditions (C1) Indoor with temporary condensation (C2)	1x 3 m	**2362802**	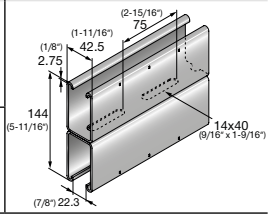
MT-60D		1x 6 m	**2362800**	

MT Open Double C-Channel - Outdoor

Applications

- Floor-mounted MEP support structures, such as goal post-type strut framing
- Ceiling-mounted MEP support structures, such as suspended strut trapeze frames
- Wall-mounted cantilever brackets for heavier pipes

Technical data

Material composition	S280 or better steel
Surface finish	Zinc-Magnesium (ZM310) - for outdoor use

Advantages

- Economical – high load/weight ratio and rapid assembly make MT strut Channel a more efficient alternative to welded MEP support structures
- Complexity kept to the minimum – optimizing logistical and on-site operations, as well as providing simplicity in installation
- Simpler to design – you can use Hilti MT components for all MEP installations from the lightest trapeze to the heaviest-duty modular framing
- Simpler to install – compatible with the innovative MT System Twist-Lock, enabling the use of a wide range of MT connectors and baseplates

MT-30 Open Double C-Channel - Outdoor

Order Designation	Technical data	Sales pack quantity	Item number	
MT-30D S OC	Outdoor, low to moderate pollution (C3 / C4 - low)	1x 3 m	**2362709**	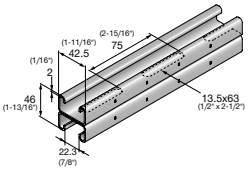
MT-30D OC		1x 6 m	**2362707**	

MT-40 Open Double C-Channel - Outdoor

Order Designation	Technical data	Sales pack quantity	Item number	
MT-40D S OC	Outdoor, low to moderate pollution (C3 / C4 - low)	1x 3 m	**2268519**	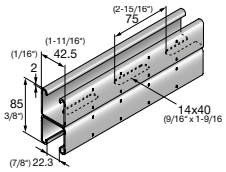
MT-40D OC		1x 6 m	**2268520**	

MT-60 Double C-Channel - Outdoor

Order Designation	Technical data	Sales pack quantity	Item number	
MT-60D OC	Dry indoor conditions (C1) Indoor with temporary condensation (C2)	1x 6 m	**2362801**	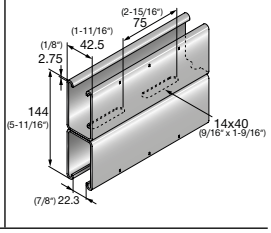

MT Box Profiles - Outdoor

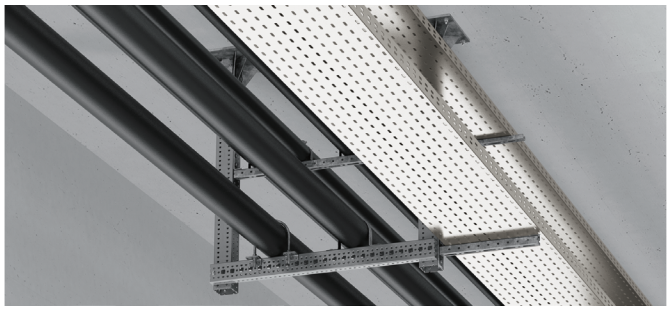

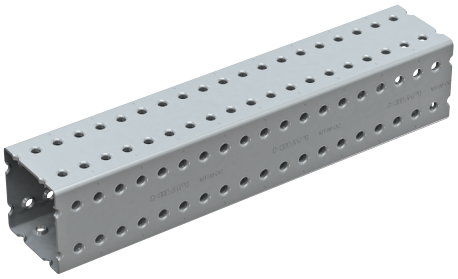

Applications

- Floor-mounted MEP support structures, such as goal post-type strut framing
- Ceiling-mounted MEP support structures, such as suspended rapeze Channel frames
- Wall-mounted cantilever brackets for heavier pipes

Advantages

- Economical – high load/weight ratio make MT box profiles an efficient alternative to welding for virtually any heavy-duty MEP supports and modular structures
- Complexity kept to the minimum – optimizing logistical and on-site operations, as well as providing simplicity in installation
- Simpler to design – you can use Hilti MT components for all MEP installations from the lightest trapeze to the heaviest-duty modular framing
- Simpler to install – compatible with the innovative MT thread-forming bolt, enabling the use of a wide range of MT connectors and baseplates, and avoiding the need for nuts

Technical data

Material composition	S350 or better steel
Surface finish	Zinc-Magnesium (ZM310) for outdoor use

MT-70 Box Profile - Outdoor

Order Designation	Technical data	Sales pack quantity	Item number	
MT-70 S OC	Outdoor, low to moderate pollution (C3 / C4 - low)	1x 3 m	**2268364**	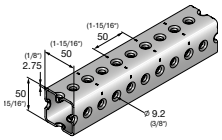
MT-70 OC		1x 6 m	**2268365**	

MT-80 Box Profile - Outdoor

Order Designation	Technical data	Sales pack quantity	Item number	
MT-80 S OC	Outdoor, low to moderate pollution (C3 / C4 - low)	1x 3 m	**2268366**	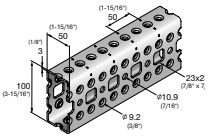
MT-80 OC		1x 6 m	**2268367**	

MT Box Profiles - Outdoor

2

MT-90 Box Profile - Outdoor

Order Designation	Technical data	Sales pack quantity	Item number	
MT-90 S OC	Outdoor, low to moderate pollution (C3 / C4 - low)	1x 3 m	**2268368**	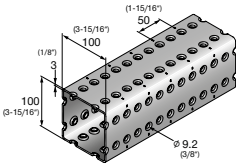
MT-90 OC		1x 6 m	**2268369**	

MT-90H Box Profile - Outdoor

Order Designation	Technical data	Sales pack quantity	Item number	
MT-90H S OC	Outdoor, low to moderate pollution (C3 / C4 - low)	1x 3 m	**2431073**	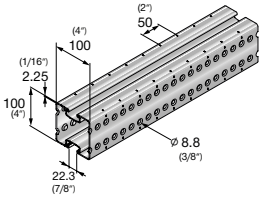
MT-90H OC		1x 6 m	**2430776**	

MT-100 Box Profile - Outdoor

Order Designation	Technical data	Sales pack quantity	Item number	
MT-100 S OC	Outdoor, low to moderate pollution (C3 / C4 - low)	1x 3 m	**2268490**	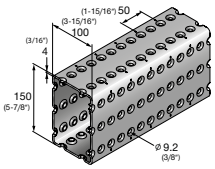
MT-100 OC		1x 6 m	**2268491**	

Overview MT Trapeze Profiles, Open C-Channels, Box Profiles

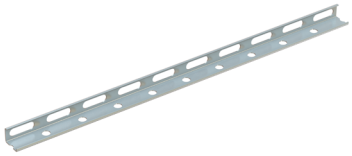

MT 10 - 2268492 (2 meter)
MT 10 S - 2360728 (3 meter)

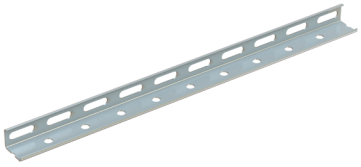

MT 15 - 2268493 (2 meter)
MT 15 S - 2360729 (3 meter)
MT 15 OC - 2268494 (2 meter)
MT 15 S OC - 2360920 (3 meter)

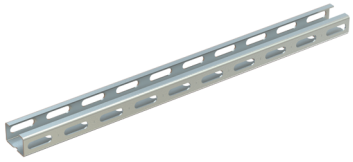

MT 20 - 2268495 (2 meter)
MT 20 S - 2360921 (3 meter)
MT 20 OC - 2268496 (2 meter)
MT 20 S OC - 2360922 (3 meter)

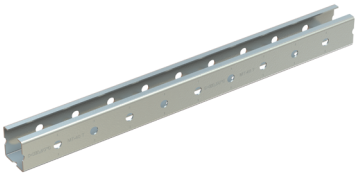

MT 40 T - 2268502 (6 meter)
MT 40 T S - 2360923 (3 meter)
MT 40 T OC - 2268504 (6 meter)
MT 40 T S OC - 2360924 (3 meter)

MT 30 - 2268498 (6 meter)
MT 30 S - 2268497 (3 meter)
MT 30 OC - 2268500 (6 meter)
MT 30 S OC - 2268499 (3 meter)

MT 30D - 2362706 (6 meter)
MT 30D S - 2362708 (3 meter)
MT 30D OC - 232707 (6 meter)
MT 30D S OC - 2362709 (3 meter)

MT 40 - 2268506 (6 meter)
MT 40 S - 2268505 (3 meter)
MT 40 OC - 2268508 (6 meter)
MT 40 S OC - 2268507 (3 meter)

MT 40D - 2268518 (6 meter)
MT 40D S - 2268517 (3 meter)
MT 40D OC - 2268520 (6 meter)
MT 40D S OC - 2268519 (3 meter)

MT 50 - 2268510 (6 meter)
MT 50 S - 2268509 (3 meter)
MT 50 OC - 2268512 (6 meter)
MT 50 S OC - 2268511 (3 meter)

MT 50D - 2362803 (6 meter)
MT 50D S - 2362804 (3 meter)

MT 50U - 2362808 (6 meter)
MT 50D U - 2362807 (6 meter)

MT 60 - 2268514 (6 meter)
MT 60 S - 2268513 (3 meter)
MT 60 OC - 2268516 (6 meter)
MT 60 S OC - 2268515 (3 meter)

MT 60D - 2362800 (6 meter)
MT 60D OC - 2362801 (6 meter)
MT 60D S - 2362802 (3 meter)

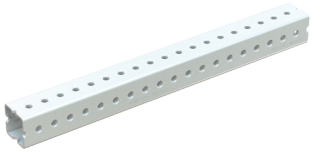

MT 70 OC - 2268365 (6 meter)
MT 70 S OC - 2268364 (3 meter)

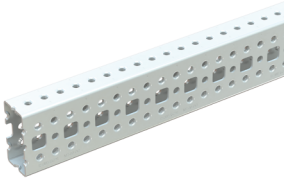

MT 80 OC - 2268367 (6 meter)
MT 80 S OC - 2268366 (3 meter)

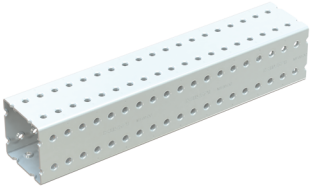

MT 90 OC - 2268369 (6 meter)
MT 90 S OC - 2268368 (3 meter)

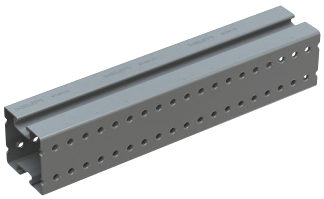

MT 90H OC - 2430776 (6 meter)
MT 90H S OC - 2431073 (3 meter)

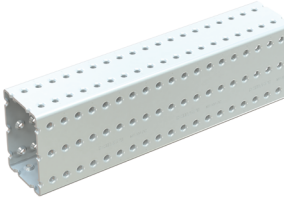

MT 100 OC - 2268491 (6 meter)
MT 100 S OC - 2268490 (3 meter)

2

Technical data for MT profiles (pregalvanized & zinc magnesium)

Trapeze Profiles

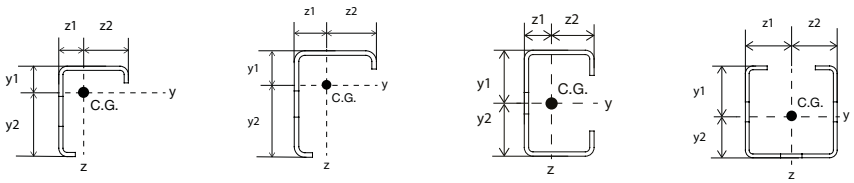

			MT-10	MT-15/ MT-15 OC	MT-20/ MT-20 OC	MT-40 T/ MT-40 T OC
Wall thickness	t	[mm]	1,2	1,5	1,75	1,75
Cross-sectional area	A	[mm²]	48,43	85,2	148,65	175,59
Channel weight		[kg/m]	0,3888	0,6784	1,267	1,69
Delivered length		[m]	2	2/3	2/3	3/6
Material properties						
Steel grade			S280GD	S280GD	S280GD	S280GD
Recommended stress	σ_{rec}	[N/mm²]	207,8	206,7	205,8	200,5
Elasticity modulus	E	[N/mm²]	210000	210000	210000	210000
Corrosion protection						
pregalvanized (EN 10346)			•	•	•	•
zinc magnesium (EN 10346)				•	•	•
Cross-section values Y-axis						
Axis of gravity	y1	[mm]	9,80	12,60	21,25	23,05
Axis of gravity	y2	[mm]	16,20	22,40	21,25	19,45
Moment of inertia	I_y	[cm⁴]	0,40	1,27	3,65	4,84
Section modulus	W_{y1}	[cm³]	0,25	0,57	1,73	2,10
Section modulus	W_{y2}	[cm³]	0,41	1,00	1,73	2,48
Radius of gyration	i_y	[cm]	0,91	1,22	1,57	1,66
Recommended moment [1)]	$M_{y,rec}$	[Nm]	52	180	355	421
Cross-section values Z-axis						
Axis of gravity	z1	[mm]	5,2	7,0	10,5	21,25
Axis of gravity	z2	[mm]	14,8	20,0	17,3	21,25
Moment of inertia	I_{z1}	[cm⁴]	0,23	0,72	1,85	5,71
Section modulus	W_{z1}	[cm³]	0,15	0,36	1,07	2,69
Section modulus	W_{z2}	[cm³]	0,45	1,03	1,07	2,69
Radius of gyration	i_z	[cm]	0,69	0,92	1,12	1,80

Design notes open profiles

- Where applicable recommended values consider partial safety factors for actions and resistance
- Recommended stress (σRec) is determined using σRec = (**fya**) / [(**γHilti**) x (**γm**)] where

fya average yield strength (EN 1993-1-3:2024)
γm = 1,1 partial Safety Factor for global buckling (DIN EN 1993-1-3:2006)
γHilti = 1,4 partial Safety Factor for action loading

1) Recommended moment (**My,Rec**) is determined using **My,Rec** = (**σRec**) x (**Wy**) where
σRec recommended Stress
Wy minimum section modulus (Wy1 ,Wy2)

2

Technical data for MT profiles (pregalvanized & zinc magnesium)

Open C-Channels

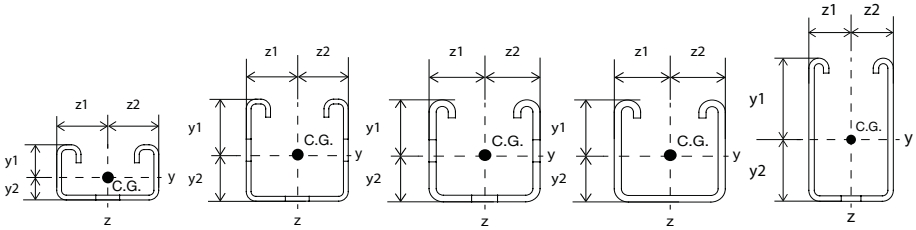

			MT-30/ MT-30 OC	MT-40 MT-40 OC	MT-50/ MT-50 OC	MT-50 U	MT-60/ MT-60 OC
Channel wall thickness	t	[mm]	2,0	2,0	2,75	2,75	2,75
Cross-sectional area	A	[mm²]	180	214	276,05	276,05	500,1
Channel weight		[kg/m]	1,486	2,039	2,744	2,744	4,017
Delivered length		[m]	3/6	3/6	3/6	3/6	3/6
Material properties							
Steel grade			S280GD	S280GD	S280GD	S280GD	S280GD
Recommended stress	σ_{rec}	[N/mm²]	205,8	202,2	207,8	207,8	202,3
Elasticity modulus	E	[N/mm²]	210000	210000	210000	210000	210000
Corrosion protection							
pregalvanized (EN 10346)			•	•	•	•	•
zinc magnesium (EN 10346)			•	•	•		•
Cross-section values Y-axis							
Axis of gravity	y1	[mm]	12,04	21,76	22,04	22,04	36,62
Axis of gravity	y2	[mm]	10,96	20,74	20,46	20,46	35,38
Moment of inertia	I_y	[cm⁴]	1,21	5,77	7,04	7,04	28,67
Section modulus	W_{y1}	[cm³]	1,00	2,65	3,19	3,19	7,83
Section modulus	W_{y2}	[cm³]	1,10	2,78	3,44	3,44	8,10
Radius of gyration	i_y	[cm]	0,82	1,64	1,60	1,60	2,39
Recommended moment [1)]	$M_{y,rec}$	[Nm]	207	536	663	663	1584
Cross-section values Z-axis							
Axis of gravity	z1	[mm]	21,25	21,25	21,25	21,25	21,25
Axis of gravity	z2	[mm]	21,25	21,25	21,25	21,25	21,25
Moment of inertia	I_{z1}	[cm⁴]	5,19	6,59	8,27	8,27	17,11
Section modulus	W_{z1}	[cm³]	2,44	3,10	3,89	3,89	8,05
Section modulus	W_{z2}	[cm³]	2,44	3,10	3,89	3,89	8,05
Radius of gyration	i_z	[cm]	1,70	1,76	1,73	1,73	1,85

Design notes open profiles

- Where applicable recommended values consider partial safety factors for actions and resistance
- Recommended stress (σRec) is determined using σRec = (**fya**) / [(**γHilti**) x (**γm**)] where

fya average yield strength (EN 1993-1-3:2024)
γm = 1,1 partial Safety Factor for global buckling (DIN EN 1993-1-3:2006)
γHilti = 1,4 partial Safety Factor for action loading

1) Recommended moment (**My,Rec**) is determined using **My,Rec** = (**σRec**) x (**Wy**) where
σRec recommended Stress
Wy minimum section modulus (Wy1 ,Wy2)

2

Technical data for MT profiles (pregalvanized & zinc magnesium)

Double Channels

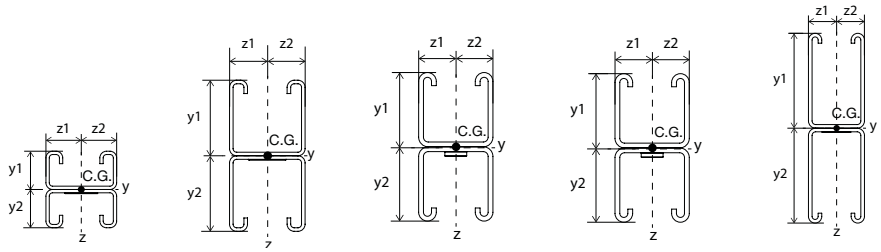

			MT-30 D/ MT-30 D OC	MT-40D/ MT-40D OC	MT-50D	MT-50D U	MT-60D/ MT-60D OC
Channel wall thickness	t	[mm]	2,0	2,0	2,75	2,75	2,75
Cross-sectional area	A	[mm²]	361,52	429,52	557,6	557,6	941,93
Channel weight		[kg/m]	2,97	4,299	5,49	5,88	8,03
Delivered length		[m]	3/6	3/6	3/6	3/6	3/6
Material properties							
Steel grade			S280GD	S280GD	S280GD	S280GD	S280GD
Recommended stress	σ_{rec}	[N/mm²]	205,8	202,2	207,8	207,8	202,3
Elasticity modulus	E	[N/mm²]	210000	210000	210000	210000	210000
Corrosion protection							
pregalvanized (EN 10346)			•	•	•	•	•
zinc magnesium (EN 10346)			•	•			•
Cross-section values Y-axis							
Axis of gravity	y1	[mm]	23,00	42,50	42,50	42,50	71,83
Axis of gravity	y2	[mm]	23,00	42,50	42,50	42,50	71,83
Moment of inertia	I_y	[cm⁴]	6,73	29,96	37,30	37,30	160,24
Section modulus	W_{y1}	[cm³]	2,93	7,05	8,78	8,78	22,56
Section modulus	W_{y2}	[cm³]	2,93	7,05	8,78	8,78	22,56
Radius of gyration	i_y	[cm]	1,37	1,60	2,59	2,59	4,15
Recommended moment [1)]	$M_{y,rec}$	[Nm]	603	1426	1824	1824	4565
Cross-section values Z-axis							
Axis of gravity	z1	[mm]	21,25	21,25	21,25	21,25	21,25
Axis of gravity	z2	[mm]	21,25	21,25	21,25	21,25	21,25
Moment of inertia	I_{z1}	[cm⁴]	10,38	13,18	16,59	16,59	32,07
Section modulus	W_{z1}	[cm³]	4,90	6,20	7,81	7,81	15,09
Section modulus	W_{z2}	[cm³]	4,90	6,20	7,81	7,81	15,09
Radius of gyration	i_z	[cm]	1,70	1,73	1,73	1,73	1,85

Design notes open profiles

- Where applicable recommended values consider partial safety factors for actions and resistance
- Recommended stress (σRec) is determined using σRec = (**fya**) / [(**γHilti**) x (**γm**)] where

fya average yield strength (EN 1993-1-3:2024)
γm = 1,1 partial Safety Factor for global buckling (DIN EN 1993-1-3:2006)
γHilti = 1,4 partial Safety Factor for action loading

1) Recommended moment (**My,Rec**) is determined using **My,Rec** = (**σRec**) x (**Wy**) where
σRec recommended Stress
Wy minimum section modulus (Wy1 ,Wy2)

2

Technical data for MT profiles (pregalvanized & zinc magnesium)

Box Profiles

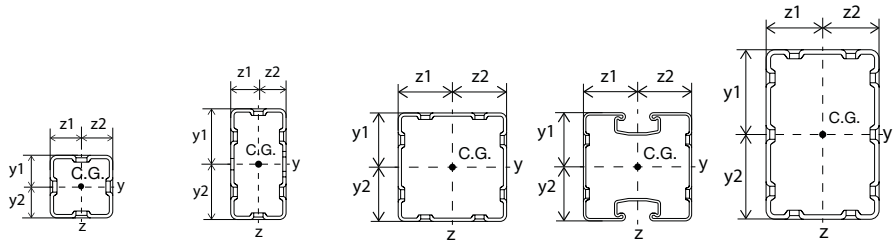

			MT-70 OC	MT-80 OC	MT-90 OC	MT-90H OC	MT-100 OC
Box wall thickness	t	[mm]	2,75	3,0	3,0	2,25	4,0
Cross-sectional area	A	[mm²]	428,78	592,66	976,08	1060,2	1555,34
Channel weight		[kg/m]	3,909	6,058	8,973	8,849	15,096
Delivered length		[m]	3/6	3/6	3/6	3/6	3/6
Material properties							
Steel grade			S350GD	S350GD	S350GD	S350GD	S350GD
Recommended stress	σ_{rec}	[N/mm²]	233,3	233,3	233,3	233,3	233,3
Elasticity modulus	E	[N/mm²]	210000	210000	210000	210000	210000
Corrosion protection							
pregalvanized (EN 10346)							
zinc magnesium (EN 10346)			•	•	•	•	•
Cross-section values Y-axis							
Axis of gravity	y1	[mm]	25,00	50,00	50,00	50,0	75,00
Axis of gravity	y2	[mm]	25,00	50,00	50,00	50,0	75,00
Moment of inertia	I_y	[cm⁴]	15,87	87,97	150,85	157,29	487,36
Section modulus	W_{y1}	[cm³]	6,35	17,59	30,17	31,46	64,98
Section modulus	W_{y2}	[cm³]	6,35	17,59	30,17	31,46	64,98
Radius of gyration	i_y	[cm]	1,92	3,85	3,93	3,85	5,60
Recommended moment [1)]	$M_{y,rec}$	[Nm]	1484	4105	7040	7340	15162
Cross-section values Z-axis							
Axis of gravity	z1	[mm]	25,0	25,0	50,0	50,0	50,0
Axis of gravity	z2	[mm]	25,0	25,0	50,0	50,0	50,0
Moment of inertia	I_{z1}	[cm⁴]	15,87	24,50	150,85	124,82	260,98
Section modulus	W_{z1}	[cm³]	6,35	9,80	30,17	24,97	52,20
Section modulus	W_{z2}	[cm³]	6,35	9,80	30,17	24,97	52,20
Radius of gyration	i_z	[cm]	1,92	2,03	3,93	3,43	4,10

Design notes box profiles

- Where applicable recommended values consider partial safety factors for actions and resistance
- Recommended stress (σRec) is determined using σRec = (**fy**) / [(**γHilti**) x (**γm**)] where

fy yield strength (EN 1993-1-1:2022)
γm = 1,0 partial Safety Factor for cross-sections (EN 1993-1-1:2022)
γHilti = 1,5 partial Safety Factor for action loading

1) Recommended moment (**My,Rec**) is determined using **My,Rec** = (**σRec**) x (**Wy**) where
σRec recommended Stress
Wy minimum section modulus (Wy1 ,Wy2)

2

Technical data for MT profiles

(max. span width/deflection - **point load in the middle of span**)

Trapeze Profiles

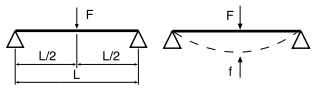

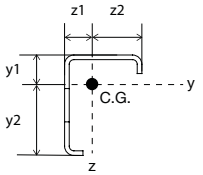

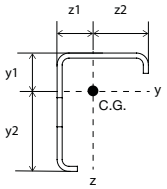

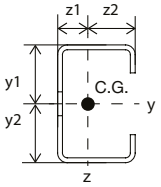

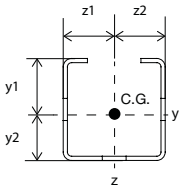

Max, span width L [cm] / deflection f [mm] - Result

	MT-10		MT-15/ MT-15 OC		MT-20/ MT-20 OC		MT-40 T/ MT-40 T OC	
load F [kN]	**L**	**f**	**L**	**f**	**L**	**f**	**L**	**f**
0,25	57	1,2	132	4,6	260	12,9	294	14,7
0,50	29	0,3	67	1,2	188	9,3	215	10,7
0,75	19	0,1	45	0,5	155	7,7	178	8,9
1,00	14	0,1	34	0,3	134	6,6	154	7,6
1,25	12	0,0	27	0,2	113	5,0	134	6,2
1,50	10	0,0	22	0,1	94	3,4	112	4,3
1,75	8	0,0	19	0,1	81	2,5	96	3,2
2,00	7	0,0	17	0,1	71	1,9	84	2,4
2,25	6	0,0	15	0,1	63	1,5	75	1,9
2,50	6	0,0	13	0,0	57	1,2	67	1,6
2,75	5	0,0	12	0,0	52	1,0	61	1,3
3,00	5	0,0	11	0,0	47	0,9	56	1,1
3,50	4	0,0	10	0,0	41	0,6	48	0,8
4,00	4	0,0	8	0,0	36	0,5	42	0,6
4,50	3	0,0	7	0,0	32	0,4	37	0,5
5,00	3	0,0	7	0,0	28	0,3	34	0,4
6,00	2	0,0	6	0,0	24	0,2	28	0,3
7,00	2	0,0	5	0,0	20	0,2	24	0,2
8,00	2	0,0	4	0,0	18	0,1	21	0,2

Design notes open profiles

- Where applicable recommended values consider partial safety factors for actions and resistance
- Recommended stress (σRec) is determined using σRec = (**fya**) / [(**γHilti**) x (**γm**)] where

fya average yield strength (EN 1993-1-3:2024)
γm = 1,1 partial Safety Factor for global buckling (DIN EN 1993-1-3:2006)
γHilti = 1,4 partial Safety Factor for action loading

Selection example:
- 1,0 kN (≈ 100 kg) should be carried by a Channel with a Channel span width L = 100cm (single span sinply supported).

Solution:
- Select the line with the load, F = 1,0 kN.
- The Channels MT-20, MT-40 T up to MT-100 can be used because the recommended span width (table value) is larger or equal to the required span width of L = 100cm.

2

Technical data for MT profiles

(max. span width/deflection - **point load in the middle of span**)

Open C-Channels

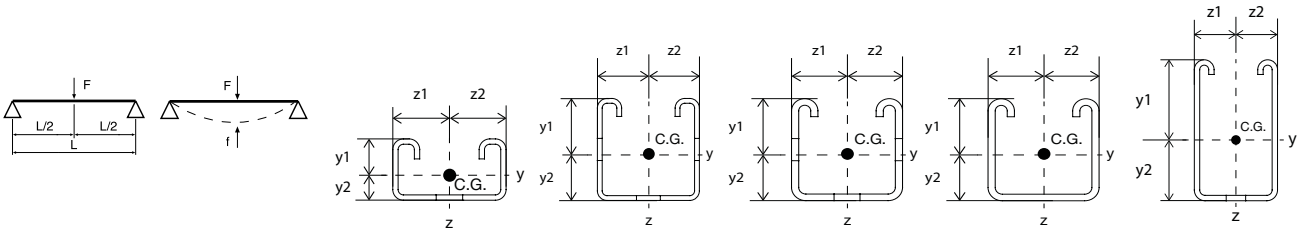

Max. span width L [cm] / deflection f [mm] - Result

	MT-30/ MT-30 OC		MT-40/ MT-40 OC		MT-50/ MT-50 OC		MT-50 U/ MT-50 U OC		MT-60/ MT-60 OC	
load F [kN]	**L**	**f**	**L**	**f**	**L**	**f**	**L**	**f**	**L**	**f**
0,25	152	7,6	317	15,8	339	16,9	338	16,9	600	51,6
0,50	109	5,5	234	11,7	254	12,6	255	12,7	600	46,0
0,75	90	4,5	194	9,6	212	10,6	212	10,6	600	41,7
1,00	78	3,9	169	8,4	185	9,3	185	9,3	600	38,3
1,25	66	2,9	151	7,6	167	8,3	166	8,3	600	35,5
1,50	55	2,1	138	6,9	152	7,6	152	7,6	600	33,2
1,75	47	1,5	122	5,5	141	7,0	141	7,0	600	31,3
2,00	41	1,2	107	4,2	132	6,5	132	6,5	593	29,7
2,25	37	0,9	95	3,3	117	5,1	117	5,1	565	28,2
2,50	33	0,7	86	2,7	106	4,2	106	4,2	540	27,0
2,75	30	0,6	78	2,2	96	3,5	96	3,5	518	25,9
3,00	28	0,5	71	1,9	88	2,9	88	2,9	499	24,9
3,50	24	0,4	61	1,4	76	2,1	76	2,1	465	23,2
4,00	21	0,3	54	1,1	66	1,6	66	1,6	438	21,9
4,50	18	0,2	48	0,8	59	1,3	59	1,3	392	17,5
5,00	17	0,2	43	0,7	53	1,1	53	1,1	355	14,4
6,00	14	0,1	36	0,5	44	0,7	44	0,7	298	10,1
7,00	12	0,1	31	0,3	38	0,5	38	0,5	257	7,5
8,00	10	0,1	27	0,3	33	0,4	33	0,4	226	5,8

Design notes open profiles

- Where applicable recommended values consider partial safety factors for actions and resistance
- Recommended stress (σRec) is determined using σRec = (**fya**) / [(**γHilti**) x (**γm**)] where

fya average yield strength (EN 1993-1-3:2024)
γm = 1,1 partial Safety Factor for global buckling (DIN EN 1993-1-3:2006)
γHilti = 1,4 partial Safety Factor for action loading

Selection example:
- 1,0 kN (≈ 100 kg) should be carried by a Channel with a Channel span width L = 100cm (single span sinply supported).

Solution:
- Select the line with the load, F = 1,0 kN.
- The Channels MT-20, MT-40 T up to MT-100 can be used because the recommended span width (table value) is larger or equal to the required span width of L = 100cm.

2

Technical data for MT profiles

(max. span width/deflection - **point load in the middle of span**)

Double Channels

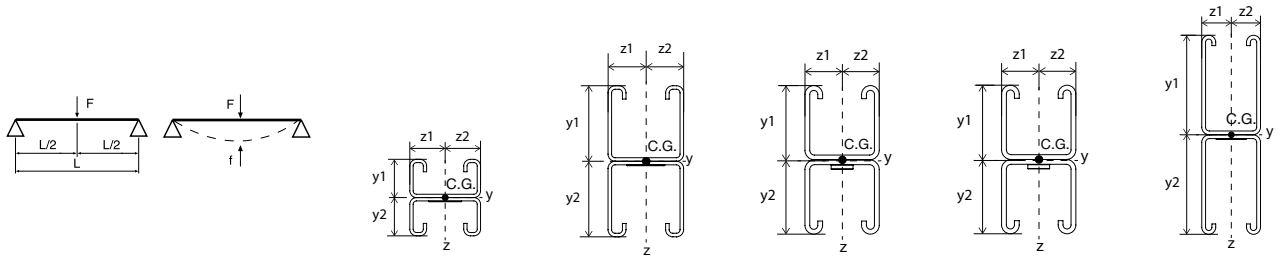

Max. span width L [cm] / deflection f [mm] - Result

	MT-30D/ MT-30D OC		MT-40D/ MT-40D OC		MT-50 D		MT-50D U		MT-60D/ MT-60D OC	
load F [kN]	**L**	**f**	**L**	**f**	**L**	**f**	**L**	**f**	**L**	**f**
0,25	331	16,5	600	30,4	600	31,8	600	31,4	600	51,6
0,50	249	12,5	491	24,5	527	26,3	522	26,1	600	46,0
0,75	207	10,4	419	21,0	456	22,8	454	22,7	600	41,7
1,00	181	9,1	371	18,6	407	20,3	405	20,2	600	38,3
1,25	163	8,1	336	16,8	370	18,5	369	18,4	600	35,5
1,50	149	7,4	309	15,4	341	17,1	340	17,0	600	33,2
1,75	136	6,6	288	14,4	318	15,9	317	15,9	600	31,3
2,00	120	5,1	270	13,5	299	14,9	299	14,9	593	29,7
2,25	107	4,0	248	11,7	283	14,1	283	14,1	565	28,2
2,50	96	3,3	224	9,5	269	13,4	269	13,4	540	27,0
2,75	87	2,7	204	7,9	257	12,9	257	12,8	518	25,9
3,00	80	2,3	188	6,7	238	11,1	238	11,0	499	24,9
3,50	69	1,7	161	4,9	205	8,2	205	8,2	465	23,2
4,00	60	1,3	141	3,8	180	6,3	180	6,3	438	21,9
4,50	54	1,0	126	3,0	161	5,0	161	5,0	392	17,5
5,00	48	0,8	113	2,4	145	4,1	145	4,1	355	14,4
6,00	40	0,6	95	1,7	121	2,8	121	2,8	298	10,1
7,00	34	0,4	81	1,2	104	2,1	104	2,1	257	7,5
8,00	30	0,3	71	1,0	91	1,6	91	1,6	226	5,8

Design notes open profiles

- Where applicable recommended values consider partial safety factors for actions and resistance
- Recommended stress (σRec) is determined using σRec = (**fya**) / [(**γHilti**) x (**γm**)] where

fya average yield strength (EN 1993-1-3:2024)
γm = 1,1 partial Safety Factor for global buckling (DIN EN 1993-1-3:2006)
γHilti = 1,4 partial Safety Factor for action loading

Selection example:

- 1,0 kN (≈ 100 kg) should be carried by a Channel with a Channel span width L = 100cm (single span sinply supported).

Solution:

- Select the line with the load, F = 1,0 kN.
- The Channels MT-20, MT-40 T up to MT-100 can be used because the recommended span width (table value) is larger or equal to the required span width of L = 100cm.

2

Technical data for MT profiles

(max. span width/deflection - **point load in the middle of span**)

Box Profiles

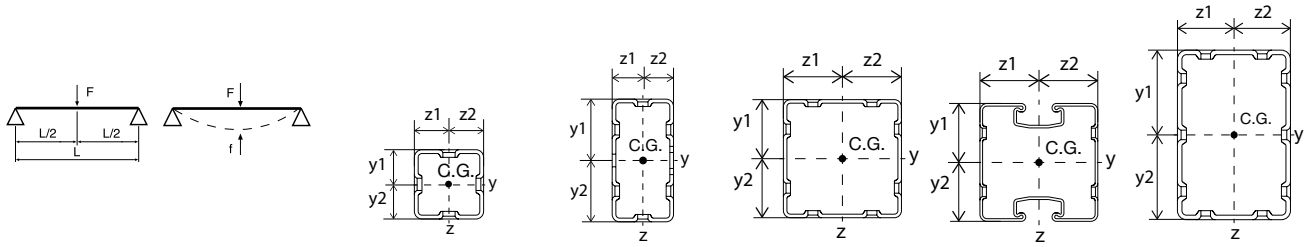

Max. span width L [cm] / deflection f [mm] - Result

	MT-70 OC		MT-80 OC		MT-90 OC		MT-90H OC		MT-100 OC	
load F [kN]	**L**	**f**	**L**	**f**	**L**	**f**	**L**	**f**	**L**	**f**
0,25	469	23,4	600	11,6	600	8,3	600	7,9	600	3,6
0,50	368	18,4	600	17,7	600	11,9	600	11,3	600	4,7
0,75	311	15,5	600	23,8	600	15,4	600	14,7	600	5,8
1,00	274	13,6	600	29,9	600	19,0	600	18,1	600	6,9
1,25	247	12,3	551	27,5	600	22,5	600	21,5	600	8,0
1,50	227	11,3	512	25,6	600	26,1	600	24,9	600	9,1
1,75	211	10,5	479	23,9	600	29,6	600	28,3	600	10,2
2,00	198	9,9	452	22,6	572	28,6	584	29,2	600	11,3
2,25	187	9,3	429	21,4	545	27,2	557	27,8	600	12,4
2,50	177	8,8	409	20,4	522	26,0	533	26,6	600	13,5
2,75	169	8,4	391	19,5	501	25,0	511	25,5	600	14,6
3,00	162	8,1	376	18,8	482	24,1	492	24,6	600	15,7
3,50	150	7,5	349	17,4	450	22,5	460	23,0	600	17,9
4,00	141	7,0	328	16,3	424	21,2	433	21,6	600	20,1
4,50	131	6,4	310	15,5	401	20,0	410	20,5	600	22,3
5,00	118	5,2	295	14,7	382	19,0	390	19,4	600	24,5
6,00	98	3,6	270	13,5	350	17,5	358	17,9	600	28,9
7,00	84	2,6	232	10,0	325	16,2	332	16,6	571	28,5
8,00	74	2,0	204	7,7	305	15,2	311	15,5	537	26,8

Design notes box profiles

- Where applicable recommended values consider partial safety factors for actions and resistance
- Recommended stress (σRec) is determined using σRec = (**fy**) / [(**γHilti**) x (**γm**)] where

fy yield strength (EN 1993-1-1:2022)
γm = 1,0 partial Safety Factor for cross-sections (EN 1993-1-1:2022)
γHilti = 1,5 partial Safety Factor for action loading

2

Technical data for MT profiles

(max. span width/deflection - **distributed load along the span**)

Trapeze Profiles

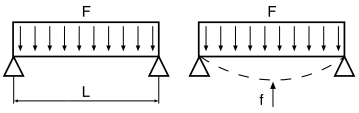

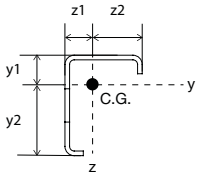

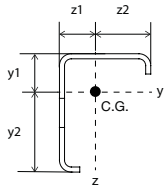

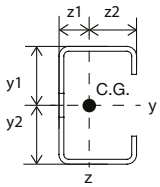

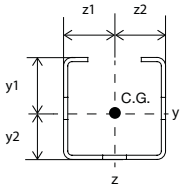

Max. span width L [cm] / deflection f [mm] - Result

	MT-10		MT-15/ MT-15 OC		MT-20/ MT-20 OC		MT-40 T/ MT-40 T OC	
load F [kN]	**L**	**f**	**L**	**f**	**L**	**f**	**L**	**f**
0,25	113	5,6	197	9,8	318	15,9	354	17,6
0,50	57	1,5	132	5,7	235	11,7	267	13,3
0,75	38	0,7	89	2,6	194	9,6	222	11,0
1,00	29	0,4	67	1,5	169	8,4	194	9,7
1,25	23	0,2	54	0,9	152	7,6	174	8,6
1,50	19	0,2	45	0,7	139	6,9	159	7,9
1,75	16	0,1	38	0,5	129	6,4	148	7,4
2,00	14	0,1	34	0,4	120	5,9	138	6,8
2,25	13	0,1	30	0,3	113	5,6	131	6,5
2,50	12	0,1	27	0,2	108	5,4	124	6,2
2,75	10	0,0	24	0,2	103	5,1	118	5,8
3,00	10	0,0	22	0,2	94	4,3	112	5,4
3,50	8	0,0	19	0,1	81	3,2	96	4,0
4,00	7	0,0	17	0,1	71	2,4	84	3,0
4,50	6	0,0	15	0,1	63	1,9	75	2,4
5,00	6	0,0	13	0,1	57	1,6	67	2,0
6,00	5	0,0	11	0,0	47	1,1	56	1,4
7,00	4	0,0	10	0,0	41	0,8	48	1,0
8,00	4	0,0	8	0,0	36	0,6	42	0,8

Design notes open profiles

- Where applicable recommended values consider partial safety factors for actions and resistance
- Recommended stress (σRec) is determined using σRec = (**fya**) / [(**γHilti**) x (**γm**)] where

fya average yield strength (EN 1993-1-3:2024)
γm = 1,1 partial Safety Factor for global buckling (DIN EN 1993-1-3:2006)
γHilti = 1,4 partial Safety Factor for action loading

2

Technical data for MT profiles

(max. span width/deflection - **distributed load along the span**)

Open C-Channels

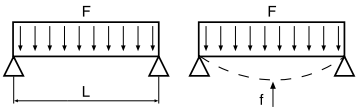

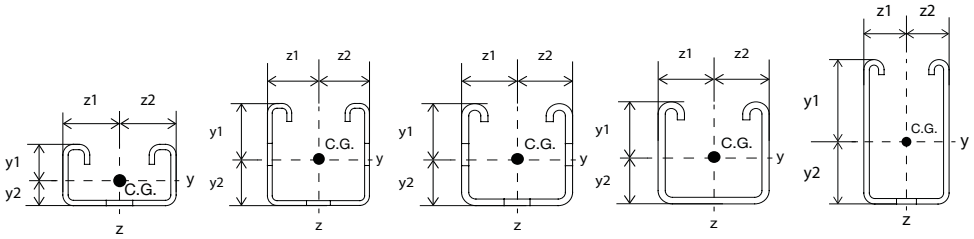

Max. span width L [cm] / deflection f [mm] - Result

	MT-30/ MT-30 OC		MT-40/ MT-40 OC		MT-50/ MT-50 OC		MT-50 U/ MT-50 U OC		MT-60/ MT-60 OC	
load F [kN]	**L**	**f**	**L**	**f**	**L**	**f**	**L**	**f**	**L**	**f**
0,25	187	9,3	377	18,8	397	19,8	395	19,7	600	22,9
0,50	137	6,8	289	14,4	311	15,5	310	15,5	564	28,2
0,75	113	5,6	241	12,0	262	13,0	262	13,1	493	24,6
1,00	98	4,9	211	10,5	231	11,5	231	11,5	443	22,1
1,25	88	4,3	190	9,5	208	10,4	208	10,4	404	20,1
1,50	80	4,0	174	8,7	191	9,5	191	9,5	374	18,7
1,75	74	3,7	162	8,1	178	8,9	177	8,9	349	17,4
2,00	69	3,4	151	7,5	167	8,3	166	8,3	329	16,4
2,25	66	3,3	143	7,1	157	7,8	157	7,9	311	15,4
2,50	62	3,1	136	6,8	149	7,4	149	7,4	297	14,8
2,75	59	3,0	129	6,4	143	7,1	142	7,1	284	14,2
3,00	55	2,6	124	6,2	137	6,8	137	6,8	272	13,5
3,50	47	1,9	115	5,7	127	6,3	127	6,3	253	12,6
4,00	41	1,4	107	5,2	119	5,9	119	5,9	237	11,8
4,50	37	1,1	95	4,2	111	5,5	112	5,6	224	11,2
5,00	33	0,9	86	3,4	106	5,2	106	5,2	213	10,6
6,00	28	0,6	71	2,3	88	3,6	88	3,6	195	9,7
7,00	24	0,5	61	1,7	76	2,7	76	2,7	179	8,8
8,00	21	0,4	54	1,3	66	2,0	66	2,0	157	6,8

Design notes open profiles

- Where applicable recommended values consider partial safety factors for actions and resistance
- Recommended stress (σRec) is determined using σRec = (**fya**) / [(**γHilti**) x (**γm**)] where

fya average yield strength (EN 1993-1-3:2024)
γm = 1,1 partial Safety Factor for global buckling (DIN EN 1993-1-3:2006)
γHilti = 1,4 partial Safety Factor for action loading

2

Technical data for MT profiles

(max. span width/deflection - **distributed load along the span**)

Double Channels

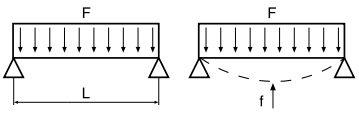

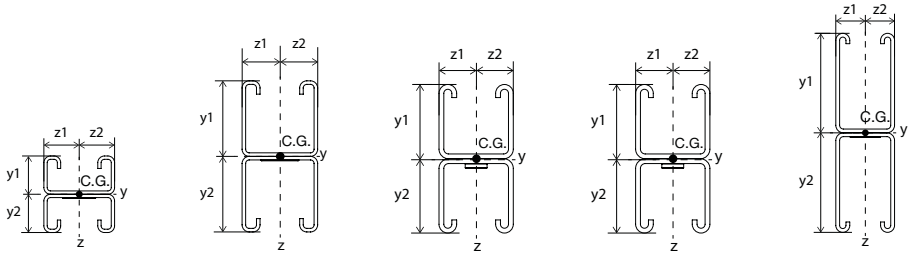

Max. span width L [cm] / deflection f [mm] - Result

	MT-30D/ MT-30D OC		MT-40D/ MT-40D OC		MT-50 D		MT-50D U		MT-60D/ MT-60D OC	
load F [kN]	**L**	**f**	**L**	**f**	**L**	**f**	**L**	**f**	**L**	**f**
0,25	387	19,3	600	33,8	600	34,7	600	34,1	600	54,1
0,50	304	15,2	573	28,6	600	30,2	597	29,8	600	50,0
0,75	256	12,8	502	25,1	538	26,9	533	26,6	600	46,6
1,00	226	11,3	451	22,5	488	24,4	485	24,2	600	43,7
1,25	204	10,2	412	20,6	449	22,4	447	22,3	600	41,2
1,50	187	9,3	382	19,1	417	20,8	416	20,8	600	39,1
1,75	174	8,7	357	17,8	392	19,6	390	19,5	600	37,2
2,00	163	8,1	336	16,8	370	18,5	369	18,4	600	35,5
2,25	154	7,7	318	15,9	351	17,5	350	17,5	600	34,0
2,50	146	7,3	303	15,1	335	16,7	334	16,7	600	32,7
2,75	139	7,0	290	14,5	321	16,0	320	16,0	600	31,5
3,00	134	6,7	278	13,9	308	15,4	308	15,4	600	30,4
3,50	124	6,2	259	12,9	287	14,3	286	14,3	572	28,6
4,00	116	5,8	243	12,1	269	13,4	269	13,4	540	27,0
4,50	107	5,0	229	11,4	255	12,7	254	12,7	513	25,6
5,00	96	4,1	218	10,9	242	12,1	242	12,1	490	24,5
6,00	80	2,9	188	8,3	222	11,1	221	11,1	451	22,5
7,00	69	2,1	161	6,1	205	10,2	205	10,2	420	21,0
8,00	60	1,6	141	4,7	180	7,9	180	7,9	394	19,7

Design notes open profiles

- Where applicable recommended values consider partial safety factors for actions and resistance
- Recommended stress (σRec) is determined using σRec = (**fya**) / [(**γHilti**) x (**γm**)] where

fya average yield strength (EN 1993-1-3:2024)
γm = 1,1 partial Safety Factor for global buckling (DIN EN 1993-1-3:2006)
γHilti = 1,4 partial Safety Factor for action loading

2

Technical data for MT profiles

(max. span width/deflection - **distributed load along the span**)

Box Profiles

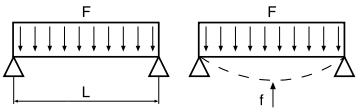

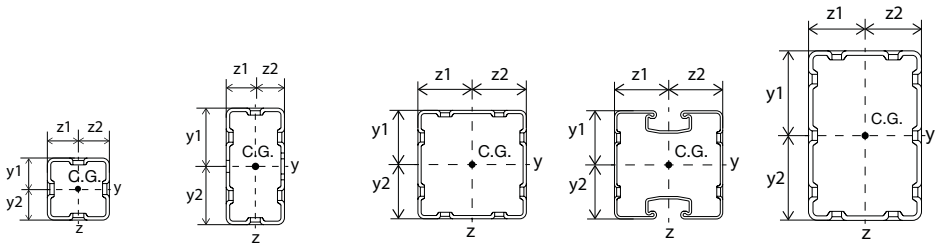

Max. span width L [cm] / deflection f [mm] - Result

	MT-70 OC		MT-80 OC		MT-90 OC		MT-90H OC		MT-100 OC	
load F [kN]	**L**	**f**	**L**	**f**	**L**	**f**	**L**	**f**	**L**	**f**
0,25	529	26,4	600	9,3	600	7,0	600	6,6	600	3,2
0,50	437	21,8	600	13,1	600	9,2	600	8,7	600	3,9
0,75	378	18,9	600	17,0	600	11,4	600	10,9	600	4,6
1,00	336	16,8	600	20,8	600	13,7	600	13,0	600	5,2
1,25	306	15,3	600	24,6	600	15,9	600	15,1	600	5,9
1,50	281	14,0	600	28,4	600	18,1	600	17,3	600	6,6
1,75	263	13,1	581	29,0	600	20,3	600	19,4	600	7,3
2,00	247	12,3	551	27,5	600	22,5	600	21,5	600	8,0
2,25	234	11,6	526	26,3	600	24,8	600	23,6	600	8,7
2,50	222	11,1	503	25,1	600	27,0	600	25,8	600	9,4
2,75	213	10,6	483	24,1	600	29,2	600	27,9	600	10,0
3,00	204	10,1	465	23,2	587	29,3	600	30,0	600	10,7
3,50	189	9,4	434	21,7	552	27,5	563	28,1	600	12,1
4,00	177	8,8	409	20,4	522	26,0	532	26,5	600	13,5
4,50	167	8,3	387	19,3	496	24,7	506	25,3	600	14,9
5,00	159	7,9	369	18,4	474	23,7	483	24,1	600	16,2
6,00	145	7,2	338	16,9	436	21,8	445	22,2	600	19,0
7,00	134	6,6	314	15,7	406	20,3	415	20,7	600	21,7
8,00	126	6,3	295	14,7	381	19,0	390	19,4	600	24,5

Design notes box profiles

- Where applicable recommended values consider partial safety factors for actions and resistance
- Recommended stress (σRec) is determined using σRec = (**fy**) / [(**γHilti**) x (**γm**)] where

fy yield strength (EN 1993-1-1:2022)
γm = 1,0 partial Safety Factor for cross-sections (EN 1993-1-1:2022)
γHilti = 1,5 partial Safety Factor for action loading

2

Technical data for MT profiles

(max. span width/deflection - **point load in the middle of span**)

Trapeze Profiles

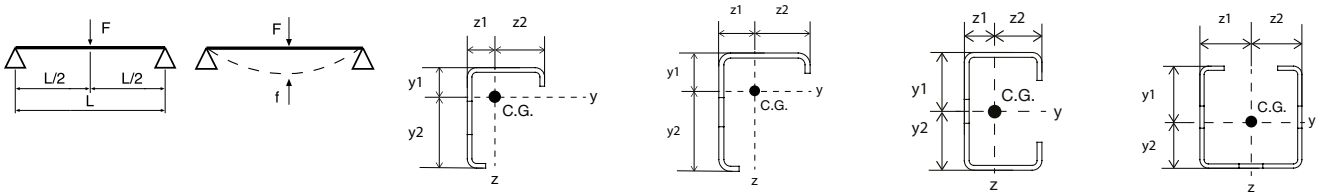

Max. load F [kN] / deflection f [mm] - Result

	MT-10		MT-15/ MT-15 OC		MT-20/ MT-20 OC		MT-40 T/ MT-40 T OC	
span width L [cm]	**F**	**f**	**F**	**f**	**F**	**f**	**F**	**f**
25	0,58	0,2	1,34	0,2	5,69	0,2	6,74	0,2
50	0,29	0,9	0,67	0,7	2,84	1,0	3,36	0,9
75	0,19	2,0	0,45	1,5	1,89	2,2	2,24	1,9
100	0,14	3,5	0,33	2,6	1,42	3,9	1,68	3,5
125	0,11	5,6	0,26	4,1	1,13	6,1	1,34	5,4
150	0,09	7,5	0,22	6,0	0,80	7,5	1,07	7,5
175	0,06	8,7	0,19	8,1	0,59	8,7	0,78	8,7
200	0,05	9,9	0,15	9,9	0,44	10,0	0,59	10,0
225	0,03	11,1	0,12	11,2	0,34	11,2	0,46	11,2
250	0,03	12,3	0,09	12,4	0,27	12,4	0,36	12,4
275	0,02	13,4	0,07	13,6	0,22	13,6	0,29	13,6
300	0,01	14,5	0,06	14,7	0,18	14,8	0,24	14,8
325	0,01	15,6	0,05	15,9	0,15	16,0	0,19	16,0
350	0,01	16,6	0,04	17,0	0,12	17,2	0,16	17,2
375			0,03	18,1	0,10	18,3	0,13	18,3
400			0,02	19,1	0,08	19,4	0,11	19,4
425			0,02	20,1	0,06	20,5	0,09	20,5
450			0,01	21,1	0,05	21,6	0,07	21,6
475			0,01	22,0	0,04	22,6	0,05	22,6
500					0,03	23,6	0,04	23,6
525					0,02	24,6	0,03	24,5
550					0,01	25,5	0,02	25,4
575					0,01	26,3	0,01	26,3
600								

Design notes open profiles

- Where applicable recommended values consider partial safety factors for actions and resistance
- Recommended stress (σRec) is determined using σRec = (**fya**) / [(**γHilti**) x (**γm**)] where

fya average yield strength (EN 1993-1-3:2024)
γm = 1,1 partial Safety Factor for global buckling (DIN EN 1993-1-3:2006)
γHilti = 1,4 partial Safety Factor for action loading

2

Technical data for MT profiles

(max. span width/deflection - **point load in the middle of span**)

Open C-Channels

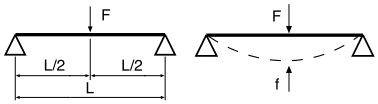

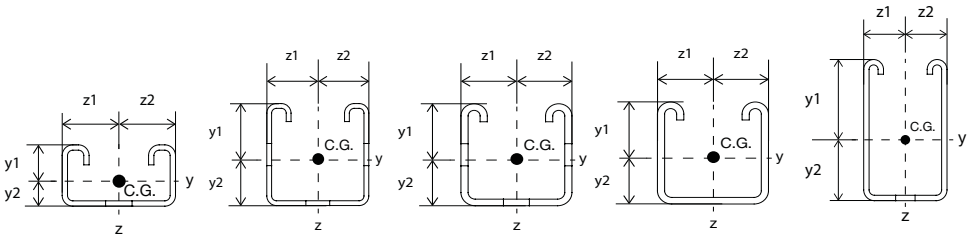

Max. load F [kN] / deflection f [mm] - Result

	MT-30/ MT-30 OC		MT-40/ MT-40 OC		MT-50/ MT-50 OC		MT-50 U/ MT-50 U OC		MT-60/ MT-60 OC	
span width L [cm]	**F**	**f**	**F**	**f**	**F**	**f**	**F**	**f**	**F**	**f**
25	3,31	0,4	8,58	0,2	10,61	0,2	10,61	0,2	25,35	0,1
50	1,65	1,7	4,29	0,9	5,30	0,9	5,31	0,9	12,67	0,5
75	1,08	3,7	2,85	2,1	3,53	2,1	3,54	2,1	8,44	1,2
100	0,60	5,0	2,14	3,7	2,64	3,7	2,65	3,8	6,32	2,2
125	0,38	6,2	1,70	5,8	2,11	5,9	2,12	5,9	5,05	3,4
150	0,26	7,5	1,27	7,5	1,55	7,5	1,55	7,5	4,20	4,9
175	0,18	8,7	0,93	8,7	1,13	8,7	1,13	8,8	3,59	6,7
200	0,13	9,9	0,70	10,0	0,85	10,0	0,85	10,0	3,13	8,8
225	0,10	11,0	0,54	11,2	0,66	11,2	0,66	11,3	2,77	11,1
250	0,07	12,2	0,43	12,4	0,52	12,4	0,53	12,5	2,24	12,5
275	0,05	13,3	0,35	13,6	0,42	13,6	0,42	13,8	1,83	13,7
300	0,04	14,4	0,28	14,8	0,34	14,8	0,34	15,0	1,52	14,9
325	0,02	15,4	0,23	16,0	0,27	16,0	0,28	16,3	1,28	16,1
350	0,01	16,3	0,19	17,2	0,22	17,1	0,23	17,5	1,08	17,4
375			0,15	18,3	0,18	18,3	0,19	18,8	0,92	18,6
400			0,13	19,4	0,15	19,4	0,15	20,0	0,79	19,8
425			0,10	20,5	0,12	20,4	0,12	21,3	0,68	21,0
450			0,08	21,6	0,09	21,5	0,10	22,5	0,59	22,1
475			0,06	22,6	0,07	22,5	0,08	23,8	0,51	23,3
500			0,05	23,6	0,05	23,4	0,06	25,0	0,44	24,4
525			0,03	24,5	0,03	24,3	0,04	26,3	0,38	25,6
550			0,02	25,4	0,01	25,2	0,02	27,5	0,33	26,7
575			0,01	26,3			0,01	28,8	0,28	27,8
600							0,00	30,0	0,24	28,8

Design notes open profiles

- Where applicable recommended values consider partial safety factors for actions and resistance
- Recommended stress (σRec) is determined using σRec = (**fya**) / [(**γHilti**) x (**γm**)] where

fya average yield strength (EN 1993-1-3:2024)
γm = 1,1 partial Safety Factor for global buckling (DIN EN 1993-1-3:2006)
γHilti = 1,4 partial Safety Factor for action loading

2

Technical data for MT profiles

(max. span width/deflection - **point load in the middle of span**)

Double Channels

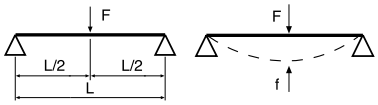

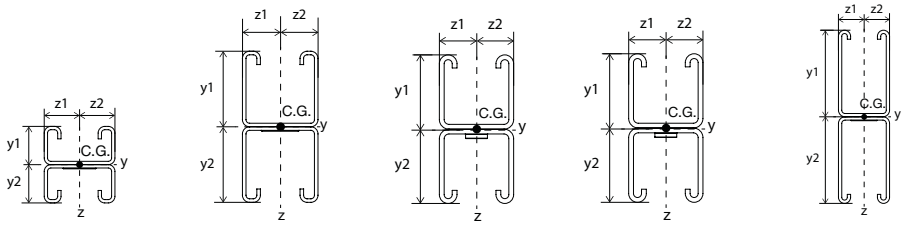

Max. load F [kN] / deflection f [mm] - Result

	MT-30D/ MT-30D OC		MT-40D/ MT-40D OC		MT-50 D		MT-50D U		MT-60D/ MT-60D OC	
span width L [cm]	**F**	**f**	**F**	**f**	**F**	**f**	**F**	**f**	**F**	**f**
25	8,73 * **	0,2	14.13 *	0,1	17,81 *	0,1	19,37 *	0,1	25,24 *	0,0
50	4,82	0,9	11,40	0,5	14,59	0,5	14,59	0,5	25,24 *	0,2
75	3,21	2,0	7,60	1,1	9,73	1,1	9,73	1,1	24,35	0,6
100	2,40	3,6	5,70	1,9	7,30	1,9	7,30	2,0	18,26	1,1
125	1,91	5,6	4,56	3,0	5,84	3,1	5,84	3,1	14,61	1,8
150	1,48	7,5	3,80	4,3	4,86	4,4	4,86	4,4	12,17	2,6
175	1,08	8,8	3,26	5,9	4,17	6,0	4,17	6,0	10,43	3,5
200	0,81	10,0	2,85	7,7	3,65	7,9	3,65	7,9	9,13	4,6
225	0,63	11,3	2,53	9,8	3,24	10,1	3,24	10,1	8,12	5,8
250	0,50	12,5	2,28	12,1	2,92	12,5	2,92	12,5	7,30	7,2
275	0,40	13,8	1,93	13,8	2,39	13,8	2,39	13,8	6,64	8,7
300	0,32	15,0	1,60	15,0	1,99	15,0	1,98	15,0	6,09	10,4
325	0,26	16,3	1,35	16,3	1,67	16,3	1,66	16,3	5,62	12,3
350	0,21	17,5	1,14	17,5	1,42	17,5	1,41	17,5	5,22	14,3
375	0,17	18,8	0,98	18,8	1,21	18,8	1,20	18,8	4,87	16,5
400	0,14	20,0	0,84	20,0	1,04	20,0	1,03	20,0	4,56	18,9
425	0,11	21,3	0,73	21,3	0,90	21,3	0,89	21,3	4,26	21,3
450	0,09	22,5	0,63	22,5	0,78	22,5	0,77	22,5	3,77	22,5
475	0,06	23,8	0,55	23,8	0,67	23,8	0,66	23,8	3,35	23,8
500	0,04	25,0	0,48	25,0	0,58	25,0	0,57	25,0	2,98	25,0
525	0,03	26,3	0,41	26,3	0,51	26,3	0,49	26,3	2,67	26,3
550	0,01	27,5	0,36	27,5	0,44	27,5	0,42	27,5	2,40	27,5
575	0,00	28,8	0,31	28,8	0,38	28,8	0,36	28,8	2,16	28,8
600	0,00	28,8	0,26	30,0	0,32	30,0	0,31	30,0	1,95	30,0

* Span limited by shear flow resistance of back-to-back joints.
** Maximum load limited to 5.71kN due to back-to-back Channel separation

Design notes open profiles

- Where applicable recommended values consider partial safety factors for actions and resistance
- Recommended stress (σRec) is determined using σRec = (**fya**) / [(**γHilti**) x (**γm**)] where

fya average yield strength (EN 1993-1-3:2024)
γm = 1,1 partial Safety Factor for global buckling (DIN EN 1993-1-3:2006)
γHilti = 1,4 partial Safety Factor for action loading

2

Technical data for MT profiles

(max. span width/deflection - **point load in the middle of span**)

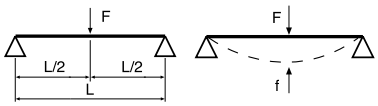

Box Profiles

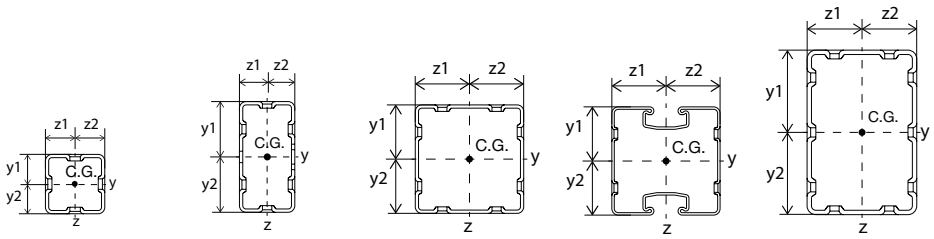

Max. load F [kN] / deflection f [mm] - Result

	MT-70 OC		MT-80 OC		MT-90 OC		MT-90H OC		MT-100 OC	
span width L [cm]	**F**	**f**	**F**	**f**	**F**	**f**	**F**	**f**	**F**	**f**
25	23,70	0,2	65,68	0,1	106,17	0,1	60,76	0,1	222,70	0,1
50	11,84	0,9	32,83	0,5	56,29	0,5	58,70	0,5	121,26	0,3
75	7,89	2,1	21,87	1,0	37,51	1,0	39,12	1,0	80,81	0,7
100	5,91	3,7	16,39	1,9	28,11	1,9	29,32	1,9	60,57	1,2
125	4,72	5,8	13,10	2,9	22,47	2,9	23,43	2,9	48,43	1,9
150	3,52	7,5	10,90	4,2	18,70	4,2	19,51	4,2	40,32	2,8
175	2,57	8,7	9,33	5,7	16,01	5,7	16,70	5,7	34,52	3,8
200	1,95	10,0	8,15	7,4	13,99	7,4	14,59	7,4	30,17	4,9
225	1,52	11,2	7,23	9,4	12,41	9,4	12,95	9,4	26,79	6,3
250	1,21	12,4	6,49	11,6	11,15	11,6	11,63	11,6	24,07	7,7
275	0,98	13,7	5,75	13,7	9,88	13,7	10,32	13,7	21,85	9,4
300	0,81	14,9	4,80	15,0	8,26	15,0	8,63	15,0	19,99	11,1
325	0,67	16,1	4,06	16,2	7,00	16,2	7,31	16,2	18,42	13,1
350	0,56	17,3	3,47	17,4	5,99	17,4	6,26	17,4	17,06	15,2
375	0,47	18,4	3,00	18,7	5,17	18,7	5,41	18,7	15,89	17,4
400	0,39	19,6	2,60	19,9	4,50	19,9	4,71	19,9	14,86	19,9
425	0,33	20,7	2,28	21,1	3,95	21,1	4,13	21,1	13,16	21,2
450	0,27	21,9	2,00	22,3	3,48	22,3	3,64	22,4	11,66	22,4
475	0,23	22,9	1,77	23,5	308	23,6	3,23	23,6	10,39	23,6
500	0,19	24,0	1,56	24,7	2,73	24,8	2,87	24,8	9,30	24,9
525	0,15	25,0	1,39	25,9	2,43	26,0	2,56	26,0	8,37	26,1
550	0,12	26,1	1,24	27,1	2,17	27,2	2,29	27,2	7,55	27,3
575	0,09	27,0	1,10	28,3	1,94	28,3	2,05	28,4	6,83	28,5
600	0,06	28,0	0,98	29,4	1,74	29,5	1,84	29,5	6,20	29,7

Design notes box profiles

- Where applicable recommended values consider partial safety factors for actions and resistance
- Recommended stress (σRec) is determined using σRec = (**fy**) / [(**γHilti**) x (**γm**)] where

fy yield strength (EN 1993-1-1:2022)
γm = 1,0 partial Safety Factor for cross-sections (EN 1993-1-1:2022)
γHilti = 1,5 partial Safety Factor for action loading

2

Technical data for MT profiles
(max. span width/deflection - **distributed load along the span**)

Trapeze Profiles

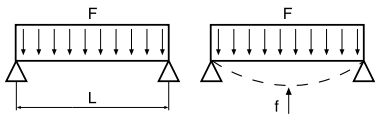

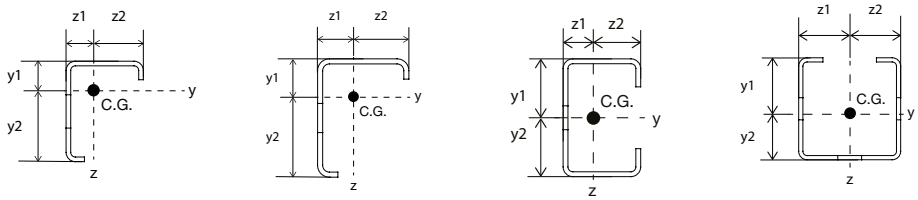

Max. span width L [cm] / deflection f [mm] - Result

	MT-10		MT-15/ MT-15 OC		MT-20/ MT-20 OC		MT-40 T/ MT-40 T OC	
span width L [cm]	**F**	**f**	**F**	**f**	**F**	**f**	**F**	**f**
25	1,15	0,3	2,69	0,2	8,65	0,2	13,47	0,3
50	0,58	1,1	1,34	0,8	5,68	1,2	6,73	1,1
75	0,38	2,5	0,89	1,9	3,78	2,7	4,48	2,4
100	0,28	4,4	0,67	3,3	2,83	4,8	3,35	4,3
125	0,20	6,3	0,53	5,1	1,87	6,3	2,47	6,3
150	0,14	7,5	0,44	7,4	1,29	7,5	1,71	7,5
175	0,10	8,8	0,32	8,8	0,94	8,8	1,24	8,8
200	0,07	10,0	0,24	10,0	0,71	10,0	0,94	10,0
225	0,06	11,3	0,19	11,3	0,55	11,3	0,73	11,3
250	0,04	12,5	0,15	12,5	0,44	12,5	0,58	12,5
275	0,03	13,8	0,12	13,8	0,35	13,8	0,47	13,8
300	0,02	15,0	0,09	15,0	0,29	15,0	0,38	15,0
325	0,02	16,3	0,07	16,3	0,24	16,3	0,31	16,3
350	0,01	17,5	0,06	17,5	0,20	17,5	0,26	17,5
375	0,01	18,8	0,05	18,8	0,16	18,8	0,21	18,8
400			0,04	20,0	0,13	20,0	0,18	20,0
425			0,03	21,3	0,11	21,3	0,14	21,3
450			0,02	22,5	0,09	22,5	0,12	22,5
475			0,01	23,8	0,07	23,8	0,09	23,8
500			0,01	25,0	0,05	25,0	0,07	25,0
525					0,04	26,3	0,05	26,3
550					0,03	27,5	0,04	27,5
575					0,02	28,8	0,02	28,8
600					0,01	30,0	0,01	30,0

Design notes open profiles

- Where applicable recommended values consider partial safety factors for actions and resistance
- Recommended stress (σRec) is determined using σRec = (**fya**) / [(**γHilti**) x (**γm**)] where

fya average yield strength (EN 1993-1-3:2024)
γm = 1,1 partial Safety Factor for global buckling (DIN EN 1993-1-3:2006)
γHilti = 1,4 partial Safety Factor for action loading

2

Technical data for MT profiles
(max. span width/deflection - **distributed load along the span**)

Open C-Channels

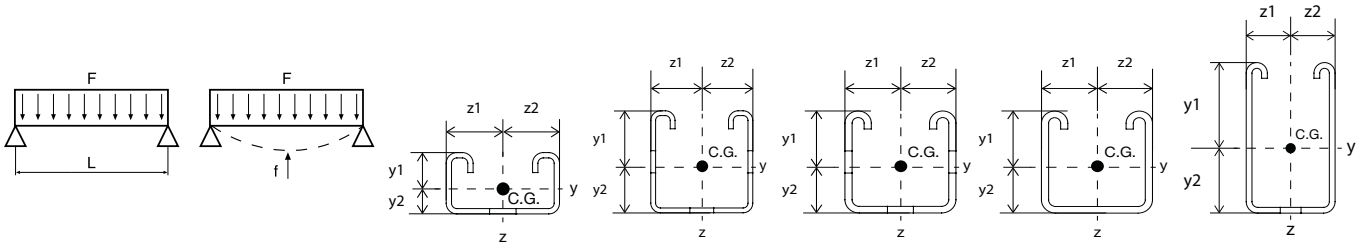

Max. span width L [cm] / deflection f [mm] - Result

	MT-30/ MT-30 OC		MT-40/ MT-40 OC		MT-50/ MT-50 OC		MT-50 U/ MT-50 U OC		MT-60/ MT-60 OC	
span width L [cm]	**F**	**f**	**F**	**f**	**F**	**f**	**F**	**f**	**F**	**f**
25	6,61	0,5	17,16	0,3	21,22	0,3	21,23	0,3	50,70	0,2
50	3,30	2,1	8,57	1,2	10,60	1,2	10,61	1,2	25,34	0,7
75	1,72	3,8	5,71	2,6	7,06	2,6	7,06	2,6	16,87	1,5
100	0,96	5,0	4,27	4,6	5,28	4,7	5,29	4,7	12,64	2,7
125	0,61	6,3	2,95	6,3	3,60	6,3	3,60	6,3	10,09	4,3
150	0,41	7,5	2,04	7,5	2,48	7,5	2,48	7,5	8,39	6,2
175	0,29	8,8	1,48	8,8	1,81	8,8	1,81	8,8	7,17	8,4
200	0,21	10,0	1,12	10,0	1,36	10,0	1,36	10,0	5,70	10,0
225	0,16	11,3	0,87	11,3	1,06	11,3	1,06	11,3	4,48	11,3
250	0,12	12,5	0,69	12,5	0,84	12,5	0,84	12,5	3,60	12,5
275	0,09	13,8	0,56	13,8	0,67	13,8	0,68	13,8	2,95	13,8
300	0,06	15,0	0,46	15,0	0,55	15,0	0,55	15,0	2,45	15,0
325	0,04	16,3	0,37	16,3	0,45	16,3	0,45	16,3	2,06	16,3
350	0,03	17,5	0,31	17,5	0,37	17,5	0,37	17,5	1,75	17,5
375	0,01	18,8	0,25	18,8	0,30	18,8	0,30	18,8	1,49	18,8
400			0,21	20,0	0,24	20,0	0,25	20,0	1,28	20,0
425			0,17	21,3	0,20	21,3	0,20	21,3	1,11	21,3
450			0,14	22,5	0,16	22,5	0,16	22,5	0,96	22,5
475			0,11	23,8	0,12	23,8	0,12	23,8	0,83	23,8
500			0,08	25,0	0,09	25,0	0,09	25,0	0,72	25,0
525			0,05	26,3	0,06	26,3	0,06	26,3	0,63	26,3
550			0,04	27,5	0,04	27,5	0,04	27,5	0,54	27,5
575			0,02	28,8	0,01	28,8	0,02	28,8	0,47	28,8
600			0,01	30,0			0,00	30,0	0,40	30,0

Design notes open profiles

- Where applicable recommended values consider partial safety factors for actions and resistance
- Recommended stress (σRec) is determined using σRec = (**fya**) / [(**γHilti**) x (**γm**)] where

fya average yield strength (EN 1993-1-3:2024)
γm = 1,1 partial Safety Factor for global buckling (DIN EN 1993-1-3:2006)
γHilti = 1,4 partial Safety Factor for action loading

2

Technical data for MT profiles

(max. span width/deflection - **distributed load along the span**)

Double Channels

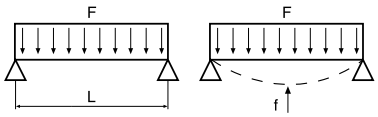

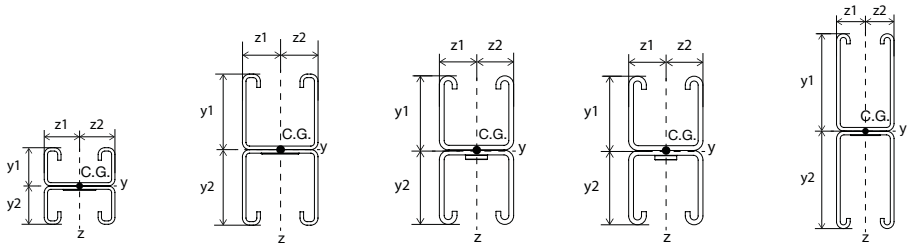

Max. span width L [cm] / deflection f [mm] - Result

	MT-30D/ MT-30D OC		MT-40D/ MT-40D OC		MT-50 D		MT-50D U		MT-60D/ MT-60D OC	
span width L [cm]	**F**	**f**	**F**	**f**	**F**	**f**	**F**	**f**	**F**	**f**
25	8,73 * **	0,1	14.13 *	0,0	17,81 *	0,0	19,37 *	0,1	25,24 *	0,0
50	8,73 * **	1,0	14.13 *	0,4	17,81 *	0,4	19,37 *	0,4	25,24 *	0,1
75	6,42 **	2,5	14.13 *	1,2	17,81 *	1,3	19,37 *	1,4	25,24 *	0,4
100	4,80	4,5	11,37	2,4	14,56	2,4	14,55	2,4	25,24 *	1,0
125	3,44	6,3	9,09	3,7	11,63	3,8	11,62	3,8	25,24 *	1,9
150	2,37	7,5	7,56	5,3	9,67	5,5	9,67	5,5	24,26	3,2
175	1,72	8,8	6,46	7,3	8,27	7,5	8,27	7,5	20,77	4,3
200	1,30	10,0	5,64	9,5	7,22	9,7	7,21	9,7	18,15	5,7
225	1,01	11,3	4,68	11,3	5,82	11,3	5,81	11,3	16,11	7,2
250	0,80	12,5	3,76	12,5	4,68	12,5	4,67	12,5	14,47	8,9
275	0,64	13,8	3,08	13,8	3,83	13,8	3,82	13,8	13,13	10,7
300	0,52	15,0	2,56	15,0	3,18	15,0	3,17	15,0	12,00	12,8
325	0,42	16,3	2,15	16,3	2,67	16,3	2,66	16,3	11,05	15,0
350	0,34	17,5	1,83	17,5	2,27	17,5	2,25	17,5	10,24	17,4
375	0,28	18,8	1,56	18,8	1,94	18,8	1,92	18,8	8,89	18,8
400	0,22	20,0	1,35	20,0	1,66	20,0	1,65	20,0	7,76	20,0
425	0,18	21,3	1,16	21,3	1,44	21,3	1,42	21,3	6,82	21,3
450	0,14	22,5	1,01	22,5	1,24	22,5	1,23	22,5	6,03	22,5
475	0,10	23,8	0,87	23,8	1,08	23,8	1,06	23,8	5,35	23,8
500	0,07	25,0	0,76	25,0	0,93	25,0	0,91	25,0	4,77	25,0
525	0,04	26,3	0,66	26,3	0,81	26,3	0,79	26,3	4,27	26,3
550	0,02	27,5	0,57	27,5	0,70	27,5	0,68	27,5	3,84	27,5
575	0,00	28,8	0,49	28,8	0,60	28,8	0,58	28,8	3,46	28,8
600	0,00	30,0	0,42	30,0	0,51	30,0	0,49	30,0	3,12	30,0

* Span limited by shear flow resistance of back-to-back joints.
** Maximum load limited to 5.71kN due to back-to-back Channel separation

Design notes open profiles

- Where applicable recommended values consider partial safety factors for actions and resistance
- Recommended stress (σRec) is determined using σRec = (**fya**) / [(**γHilti**) x (**γm**)] where

fya average yield strength (EN 1993-1-3:2024)
γm = 1,1 partial Safety Factor for global buckling (DIN EN 1993-1-3:2006)
γHilti = 1,4 partial Safety Factor for action loading

2

Technical data for MT profiles
(max. span width/deflection - **distributed load along the span**)

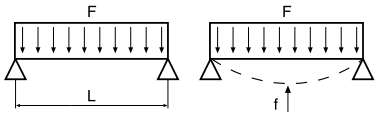

Box Profiles

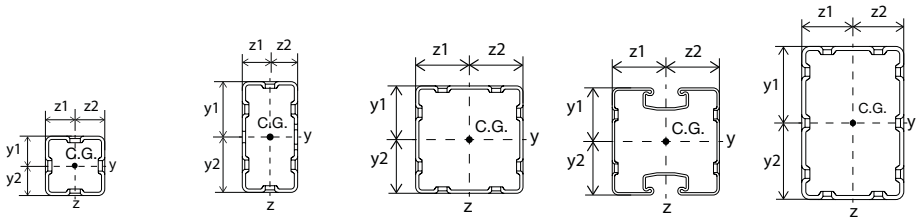

Max. span width L [cm] / deflection f [mm] - Result

	MT-70 OC		MT-80 OC		MT-90 OC		MT-90H OC		MT-100 OC	
span width L [cm]	**F**	**f**	**F**	**f**	**F**	**f**	**F**	**f**	**F**	**f**
25	47,40	0,3	124,57	0,1	106,17	0,1	60,76	0,0	222,70	0,0
50	23,69	1,2	65,66	0,6	106,17	0,5	60,76	0,3	222,70	0,4
75	15,77	2,6	43,75	1,3	75,02	1,3	60,76	1,0	161,62	0,9
100	11,81	4,6	32,78	2,3	56,23	2,3	58,64	2,3	121,15	1,5
125	8,14	6,3	26,20	3,6	44,94	3,6	46,87	3,6	96,85	2,4
150	5,63	7,5	21,80	5,2	37,41	5,2	39,02	5,2	80,64	3,5
175	4,11	8,8	18,66	7,1	32,02	7,1	33,40	7,1	69,05	4,7
200	3,12	10,0	16,30	9,3	27,98	9,3	29,19	9,3	60,35	6,2
225	2,44	11,3	13,88	11,3	23,83	11,3	24,86	11,3	53,57	7,8
250	1,95	12,5	11,20	12,5	19,24	12,5	20,07	12,5	48,14	9,6
275	1,59	13,8	9,21	13,8	15,84	13,8	16,53	13,8	43,69	11,7
300	1,31	15,0	7,70	15,0	13,25	15,0	13,83	15,0	39,98	13,9
325	1,08	16,3	6,52	16,3	11,22	16,3	11,72	16,3	36,72	16,3
350	0,91	17,5	5,58	17,5	9,62	17,5	10,05	17,5	31,55	17,5
375	0,76	18,8	4,82	18,8	8,31	18,8	8,69	18,8	27,38	18,8
400	0,64	20,0	4,19	20,0	7,24	20,0	7,58	20,0	23,96	20,0
425	0,54	21,3	3,67	21,3	6,35	21,3	6,65	21,3	21,12	21,3
450	0,46	22,5	3,23	22,5	5,60	22,5	5,87	22,5	18,73	22,5
475	0,38	23,8	2,86	23,8	4,97	23,8	5,20	23,8	16,70	23,8
500	0,32	25,0	2,53	25,0	4,42	25,0	4,63	25,0	14,97	25,0
525	0,26	26,3	2,26	26,3	3,94	26,3	4,14	26,3	13,47	26,3
550	0,21	27,5	2,01	27,5	3,53	27,5	3,71	27,5	12,16	27,5
575	0,16	28,8	1,80	28,8	3,16	28,8	3,33	28,8	11,02	28,8
600	0,12	30,0	1,61	30,0	2,84	30,0	3,00	30,0	10,01	30,0

Design notes box profiles

- Where applicable recommended values consider partial safety factors for actions and resistance
- Recommended stress (σRec) is determined using σRec = (**fy**) / [(**γHilti**) x (**γm**)] where

fy yield strength (EN 1993-1-1:2022)
γm = 1,0 partial Safety Factor for cross-sections (EN 1993-1-1:2022)
γHilti = 1,5 partial Safety Factor for action loading

Buckling

2

Recommended buckling load for MT profiles

Trapeze Profiles	Open C-Channels

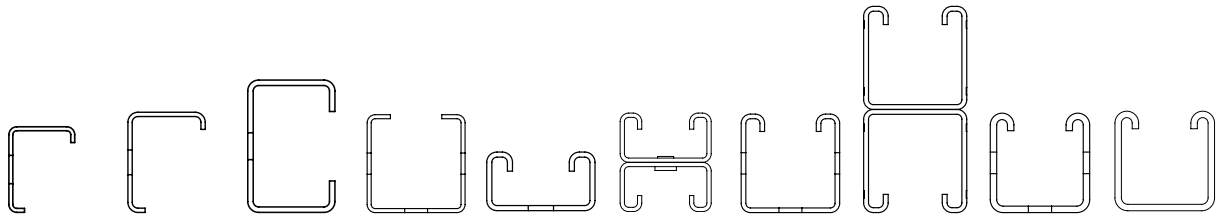

Recommended buckling load [kN]

Buckling length Sk [cm]	MT-10	MT-15 / MT-15 OC	MT-20 / MT-20 OC	MT-40 T / MT-40 T OC	MT-30 / MT-30 OC	MT-30D / MT-30D OC	MT-40 / MT-40 OC	MT-40D / MT-40D OC	MT-50 / MT-50 OC	MT-50 U / MT-50 U OC
25	N/A	N/A	27,63	31,40	28,39	73,41	38,75	87,97	50,60	55,68
50			21,28	23,28	18,60	64,66	28,88	80,21	36,91	47,92
75			15,59	15,96	11,68	54,86	19,78	72,00	25,25	39,23
100			11,86	11,31	7,95	44,36	13,90	62,95	18,14	30,58
125			9,63	8,56	5,81	34,76	10,42	53,45	13,97	23,51
150			8,19	6,86	4,46	27,14	8,26	44,43	11,35	18,32
175			6,33	5,73	3,54	21,45	6,83	36,66	9,58	14,62
200			5,03	4,93	2,88	17,25	5,82	30,34	8,29	11,94
225			4,08	4,33	2,38	14,12	5,08	25,32	7,29	9,97
250			3,37	3,86	2,01	11,75	4,51	21,35	6,49	8,46
275			2,83	3,47	1,71	9,92	4,04	18,20	5,83	7,29
300			2,41	3,15	1,47	8,47	3,66	15,67	5,27	6,36

Flexural buckling:
Rod length l (cm) / euler factor
β/Sk (cm) effective length
= l • β

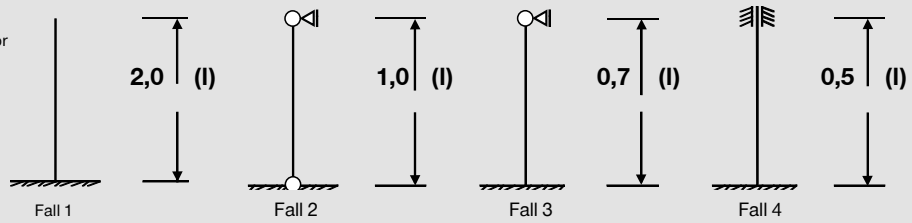

Design notes open profiles

- Where applicable recommended values consider partial safety factors for actions and resistance
- Recommended stress (σRec) is determined using σRec = (**fya**) / [(**γHilti**) x (**γm**)] where

fya average yield strength (EN 1993-1-3:2024)
γm = 1,1 partial Safety Factor for global buckling (DIN EN 1993-1-3:2006)
γHilti = 1,4 partial Safety Factor for action loading

Buckling

2

Recommended buckling load for MT profiles

Open C-Channels	Box Profiles

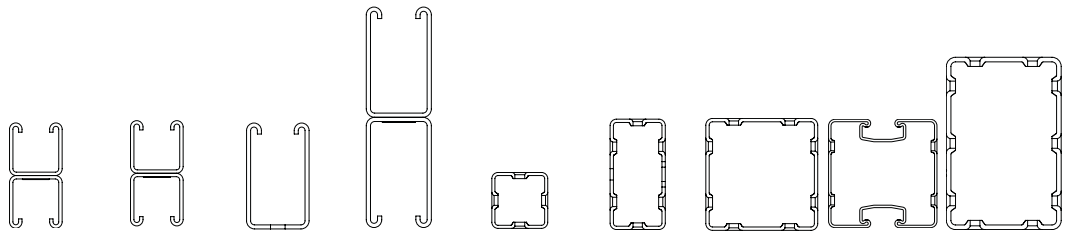

Recommended buckling load [kN]

Buckling length Sk [cm]	MT-50D	MT-50D U	MT-60 / MT-60 OC	MT-60D / MT-60D OC	MT-70 OC	MT-80 OC	MT-90 OC	MT-90H OC	MT-100 OC
25	117,05	117,05	68,93	193,90	92,41	128,31	219,78	236.56	350,41
50	106,39	106,39	52,16	177,75	84,57	118,07	210,74	226.11	336,93
75	95,04	95,04	36,33	160,84	76,34	107,42	202,00	215.28	323,55
100	82,51	82,51	25,80	142,28	67,29	95,79	193,28	204.32	310,24
125	69,48	69,48	19,47	122,54	57,70	83,33	184,34	192.90	296,65
150	57,33	57,33	15,55	103,27	48,42	70,94	175,02	180.84	282,54
175	47,03	47,03	12,97	86,13	40,25	59,66	165,24	168.13	267,77
200	38,77	38,77	11,18	71,82	33,48	50,05	155,00	154.92	252,31
225	32,26	32,26	9,86	60,25	28,04	42,18	144,40	141.57	236,27
250	27,16	27,16	8,86	51,00	23,70	35,81	133,67	128.50	219,89
275	23,11	23,11	8,06	43,59	20,24	30,67	123,05	116.10	203,52
300	19,88	19,88	7,41	37,60	17,45	26,51	112,80	104.65	187,54

Flexural buckling:
Rod length l (cm) / euler factor
β/Sk (cm) effective length
= l • β

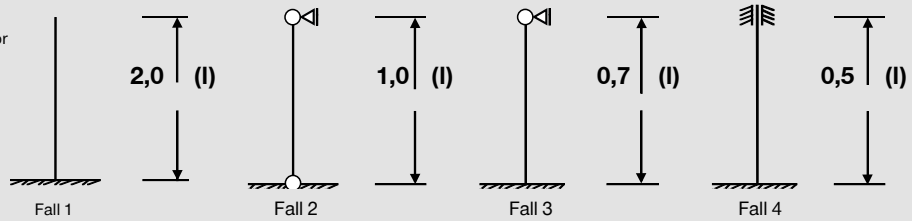

Design notes open profiles

- Where applicable recommended values consider partial safety factors for actions and resistance
- Recommended stress (σRec) is determined using σRec = (**fya**) / [(**γHilti**) x (**γm**)] where

fya average yield strength (EN 1993-1-3:2024)
γm = 1,1 partial Safety Factor for global buckling (DIN EN 1993-1-3:2006)
γHilti = 1,4 partial Safety Factor for action loading

Design notes box profiles

- Where applicable recommended values consider partial safety factors for actions and resistance
- Recommended stress (σRec) is determined using σRec = (**fy**) / [(**γHilti**) x (**γm**)] where

fy yield strength (EN 1993-1-1:2022)
γm = 1,0 partial Safety Factor for cross-sections (EN 1993-1-1:2022)
γHilti = 1,5 partial Safety Factor for action loading

MT Brackets

3

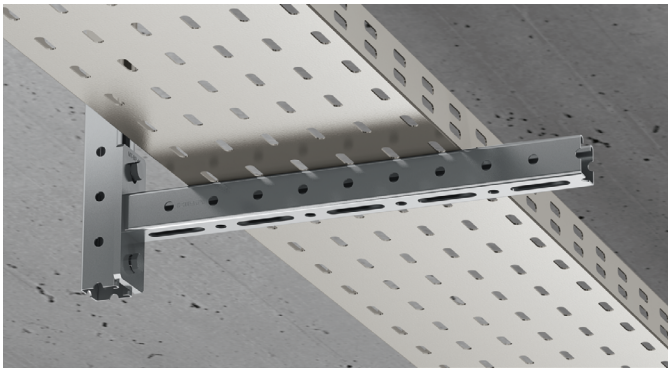

Applications

- Supporting pipe rings, ventilation ducts, cable trays and other MEP support hardware
- Mounting light-duty MEP installations on concrete and steel
- Suitable for use in dry, indoor environments

Advantages

- Part of the Hilti MT system – an economical, all-in-one solution for virtually all modular MEP support structures
- Economical – high load/weight ratio and rapid assembly make MT C-Channel a more efficient alternative to welded MEP support structures
- Easy to install – compatible with the Hilti MT Twist-Lock, a faster alternative to spring nuts for assembling a modular support system

Technical data

Material composition	Q235 or better steel
Surface finish	Electro-galvanized - for dry indoor use only

MT-BR-30 300 / 450 Bracket

Order designation	Technical data	Sales pack quantity	Item number	
MT-BR-30 300	Dry indoor conditions (C1) Indoor with temporary condensation (C2)	12 pc	**2271288**	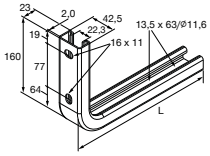
MT-BR-30 450		16 pc	**2271440**	

MT-BR-40 300 / 450 / 600 / 1000 Bracket

Order designation	Technical data	Sales pack quantity	Item number	
MT-BR-40 300	Dry indoor conditions (C1) Indoor with temporary condensation (C2)	10 pc	**2271442**	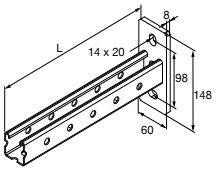
MT-BR-40 450		10 pc	**2271444**	
MT-BR-40 600		10 pc	**2271451**	
MT-BR-40 1000		10 pc	**2271446**	

MT-BR-40D 600 / 1000 Bracket

Order designation	Technical data	Sales pack quantity	Item number	
MT-BR-40D 600	Dry indoor conditions (C1) Indoor with temporary condensation (C2)	6 pc	**2271448**	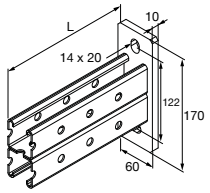
MT-BR-40D1000		6 pc	**2271450**	

MT Brackets - Outdoor

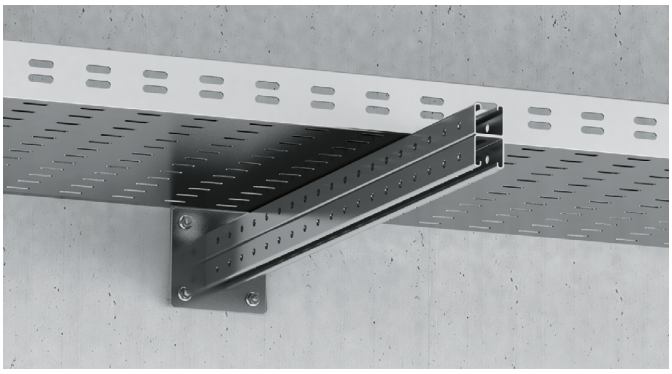

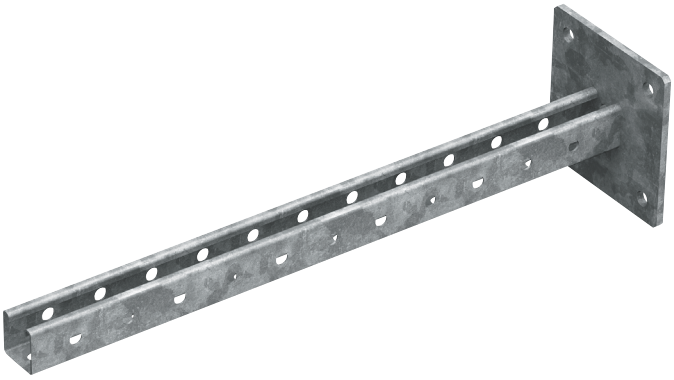

Applications

- Supporting pipe rings, ventilation ducts, cable trays and other MEP support hardware
- Mounting light-duty MEP installations on concrete and steel
- Suitable for use in moderately corrosive environments

Advantages

- Part of the Hilti MT system – an economical, all-in-one solution for virtually all modular MEP support structures
- Economical – high load/weight ratio and rapid assembly make MT C-Channel a more efficient alternative to welded MEP support structures
- Easy to install – compatible with the Hilti MT Twist-Lock for assembling a modular support system
- Comes also with four anchorage holes versions for enhanced resistance against lateral forces

Technical data

Material composition	Q235 or better steel
Surface finish	Hot-dip galvanized (56 µm ASTM A153M) for outdoor use

MT-BR-30 300 / 450 OC Bracket - Outdoor

Order designation	Technical data	Sales pack quantity	Item number	
MT-BR-30 300 OC	Outdoor, low to moderate pollution (C3 / C4 - low)	12 pc	**2271289**	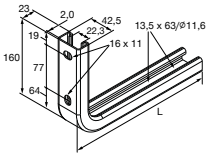
MT-BR-30 450 OC		16 pc	**2271441**	

MT Brackets - Outdoor

3

MT-BR-40 300 / 450 / 600 / 1000 OC Bracket - Outdoor

Order designation	Technical data	Sales pack quantity	Item number	
MT-BR-40 300 OC	Outdoor, low to moderate pollution (C3 / C4 - low)	10 pc	**2271443**	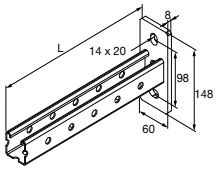
MT-BR-40 450 OC		10 pc	**2271445**	
MT-BR-40 600 OC		10 pc	**2271452**	
MT-BR-40 1000 OC		10 pc	**2271447**	

MT-BR-40 O4 600 / 1000 OC Bracket - Outdoor

Order designation	Technical data	Sales pack quantity	Item number	
MT-BR-40 O4 600 OC	Outdoor, low to moderate pollution (C3 / C4 - low)	4 pc	**2271455**	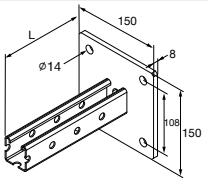
MT-BR-40 O4 1000 OC		4 pc	**2271456**	

MT-BR-40D 600 / 1000 OC Bracket - Outdoor

Order designation	Technical data	Sales pack quantity	Item number	
MT-BR-40D 600	Outdoor, low to moderate pollution (C3 / C4 - low)	6 pc	**2271449**	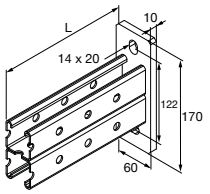
MT-BR-40D1000		6 pc	**2271453**	

MT-BR-40D O4 600 / 1000 / 1500 OC Bracket - Outdoor

Order designation	Technical data	Sales pack quantity	Item number	
MT-BR-40D O4 600 OC	Outdoor, low to moderate pollution (C3 / C4 - low)	4 pc	**2271459**	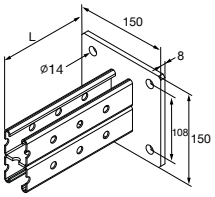
MT-BR-40D O4 1000 OC		4 pc	**2271461**	
MT-BR-40D O4 1500 OC		2 pc	**2271287**	

MT Brackets - Outdoor

3

Technical data for brackets (Hot-dip galvanized)

		$F_1 = q \cdot i$	F_1 (½ ½)	F_1	F_2 (⅓ ⅓ ⅓)	F_3 (¼ ¼ ¼ ¼)
		HST3 M10 / HUS3-H / HUS4-H 8	**HST3 M10 / HUS3-H / HUS4-H 8**	**HST3 M10 / HUS3-H / HUS4-H 8**	**HST3 M10 / HUS3-H / HUS4-H 8**	**HST3 M10 / HUS3-H / HUS4-H 8**
Bracket without bracing	**L**	**F1**	**F1**	**F1**	**F2**	**F3**
	[mm]	**N**	**N**	**N**	**N**	**N**
MT-BR-30/300 / OC	300	549	549	362	274	183
MT-BR-30/450 / OC	450	433	433	249	217	144

Technical data for brackets (Hot-dip galvanized)

		$F_1 = q \cdot i$	F_1 (½ ½)	F_1	F_2 (⅓ ⅓ ⅓)	F_3 (¼ ¼ ¼ ¼)
		HST3 M12 / HUS3-H / HUS4-H	**HST3 M12 / HUS3-H / HUS4-H**	**HST3 M12 / HUS3-H / HUS4-H**	**HST3 M12 / HUS3-H / HUS4-H**	**HST3 M12 / HUS3-H / HUS4-H**
Bracket without bracing	**L**	**F1**	**F1**	**F1**	**F2**	**F3**
	[mm]	**N**	**N**	**N**	**N**	**N**
MT-BR-40/300 / OC	300	2491	2491	1568	1246	830
MT-BR-40/450 / OC	450	1921	1921	1142	960	640
MT-BR-40/600 / OC	600	1561	1561	669	781	520
MT-BR-40/1000 / OC	1000	629	755	236	354	229
MT-BR-40 O4/600 OC	600	1416	1416	669	708	472
MT-BR-40 O4/1000 OC	1000	629	755	236	354	229
MT-BR-40D/600 / OC	600	2428	2428	1365	1214	809
MT-BR-40D/1000 / OC	1000	1579	1579	851	789	526
MT-BR-40D O4/600 OC	600	3511	3511	2035	1755	1170
MT-BR-40D O4/1000 OC	1000	2347	2347	1246	1174	782
MT-BR-40D O4/1500 OC	1500	1441	1642	540	810	524

Design notes

anchors HST3 M12 with anchorage depth of hef=70mm
anchors HST3 M10 with anchorage depth of hef=60mm
anchors HUS3H 10 with anchorage depth of hef=67mm
anchors HUS3H 8 with anchorage depth of hef=55mm
anchor resistance based on infinite edge distance
all holes must be filled with Hilti HIT-HY dynamic set
all anchors must work for shear, therefore holes must be filled with Hilti HIT-HY dynamic set
maximum deflection of L/150 considered
self weight of Channel considered

MT Open C-Channel Connectors

90° Connectors

Applications

- Right-angle connections between any MT profiles
- Assembling 2D metal framing for MEP support structures with light loads
- Suitable for use in dry, indoor environments

Technical data

Material composition	see detailed table
Surface finish	Pre-galvanized - for dry indoor use only

Advantages

- Part of the Hilti MT system – an economical, all-in-one solution for virtually all modular MEP support structures
- Easy to install – compatible with the Hilti MT Twist-Lock, a faster alternative to spring nuts for assembling a modular support system
- Adaptable – unlike welding, angle brackets allow you to modify C-Channel framing during installation and for future MEP requirements
- MT-C-T 3D connectors provide 3D frame possibilities
- MT-C-T/1 provides an alternative to using vertical double Channels
- MT-C-T A has a threaded hole on its short face, enabling the easy fixation of C-Channels through the backside using a MT-CTAB bolt

MT-C-L1 Connector

Order Designation	Material composition	Technical data	Sales pack quantity	Item number	
MT-C-L1	Q355 or better steel	Dry indoor conditions (C1) Indoor with temporary condensation (C2)	20 pc	**2271514**	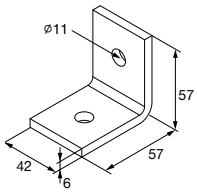

MT-C-L2 Connector

Order Designation	Material composition	Technical data	Sales pack quantity	Item number	
MT-C-L2	Q355 or better steel	Dry indoor conditions (C1) Indoor with temporary condensation (C2)	20 pc	**2271518**	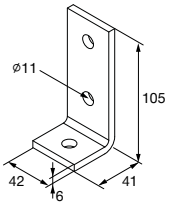

4

MT Open C-Channel Connectors
90° Connectors

MT-C-LL1 Connector

Order Designation	Material composition	Technical data	Sales pack quantity	Item number	
MT-C-LL1	Q235 or better steel	Dry indoor conditions (C1) Indoor with temporary condensation (C2)	10 pc	**2272047**	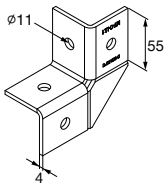

MT-C-LL2 Connector

Order Designation	Material composition	Technical data	Sales pack quantity	Item number	
MT-C-LL2	Q235 or better steel	Dry indoor conditions (C1) Indoor with temporary condensation (C2)	10 pc	**2272051**	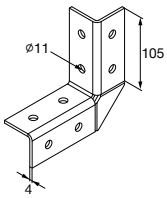

MT-C-T/2 Connector

Order Designation	Material composition	Technical data	Sales pack quantity	Item number	
MT-C-T/2	Q235 or better steel	Dry indoor conditions (C1) Indoor with temporary condensation (C2)	15 pc	**2272054**	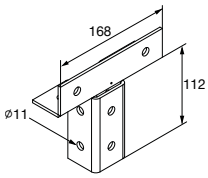

MT-C-T A Connector

Order Designation	Material composition	Technical data	Sales pack quantity	Item number	
MT-C-T A	Q355 or better steel	Dry indoor conditions (C1) Indoor with temporary condensation (C2)	20 pc	**2272056**	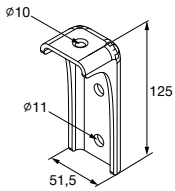

4

MT Open C-Channel Connectors
90° Connectors

MT-C-T/1 Connector

Order Designation	Material composition	Technical data	Sales pack quantity	Item number	
MT-C-T/1	Q355 or better steel	Dry indoor conditions (C1) Indoor with temporary condensation (C2)	20 pc	**2272040**	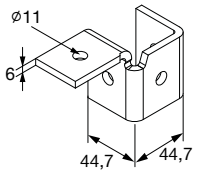

MT-C-T 3D/2 Connector

Order Designation	Material composition	Technical data	Sales pack quantity	Item number	
MT-C-T 3D/2	Q355 or better steel	Dry indoor conditions (C1) Indoor with temporary condensation (C2)	10 pc	**2272058**	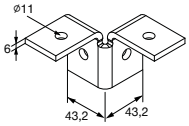

MT-C-T 3D/3 Connector

Order Designation	Material composition	Technical data	Sales pack quantity	Item number	
MT-C-T 3D/3	Q355 or better steel	Dry indoor conditions (C1) Indoor with temporary condensation (C2)	10 pc	**2272060**	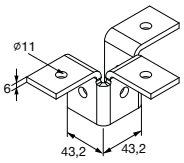

MT Open C-Channel Connectors

90° Connectors - Outdoor

Applications

- Right-angle connections between any MT profiles
- Assembling 2D metal framing for MEP support structures with light loads
- Suitable for use in moderately corrosive environments

Technical data

Material composition	Q355 or better steel
Surface finish	Hot-dip galvanized - for outdoor use

Advantages

- Part of the Hilti MT system – an economical, all-in-one solution for virtually all modular MEP support structures
- Easy to install – compatible with the Hilti MT Twist-Lock, a faster alternative to spring nuts for assembling a modular support system
- Adaptable – unlike welding, angle brackets allow you to modify C-Channel framing during installation and for future MEP requirements
- MT-C-T 3D connectors provide 3D frame possibilities
- MT-C-T/1 provides an alternative to using vertical double Channels
- MT-C-T A has a threaded hole on its short face, enabling the easy fixation of C-Channels through the backside using a MT-CTAB bolt

MT-C-L1 OC Connector - Outdoor

Order Designation	Material composition	Technical data	Sales pack quantity	Item number	
MT-C-L1 OC	Q355 or better steel	Outdoor, low to moderate pollution (C3 / C4 - low)	20 pc	**2271516**	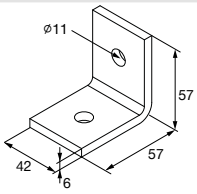

MT-C-L2 OC Connector - Outdoor

Order Designation	Material composition	Technical data	Sales pack quantity	Item number	
MT-C-L2 OC	Q355 or better steel	Outdoor, low to moderate pollution (C3 / C4 - low)	20 pc	**2271519**	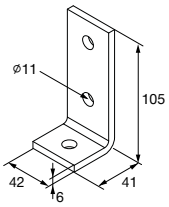

MT Open C-Channel Connectors

90° Connectors - Outdoor

4

MT-C-LL1 OC Connector - Outdoor

Order Designation	Material composition	Technical data	Sales pack quantity	Item number	
MT-C-LL1 OC	Q235 or better steel	Outdoor, low to moderate pollution (C3 / C4 - low)	10 pc	**2272049**	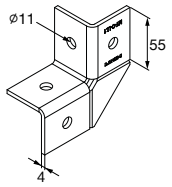

MT-C-LL2 OC Connector - Outdoor

Order Designation	Material composition	Technical data	Sales pack quantity	Item number	
MT-C-LL2 OC	Q235 or better steel	Outdoor, low to moderate pollution (C3 / C4 - low)	10 pc	**2272053**	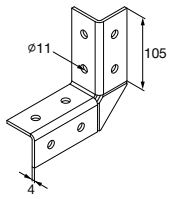

MT-C-T/1 OC Connector - Outdoor

Order Designation	Material composition	Technical data	Sales pack quantity	Item number	
MT-C-T/1 OC	Q355 or better steel	Outdoor, low to moderate pollution (C3 / C4 - low)	20 pc	**2272042**	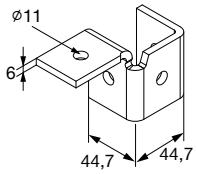

MT-C-T/2 OC Connector - Outdoor

Order Designation	Material composition	Technical data	Sales pack quantity	Item number	
MT-C-T/2 OC	Q235 or better steel	Outdoor, low to moderate pollution (C3 / C4 - low)	15 pc	**2272055**	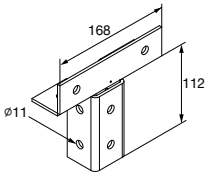

MT-C-T 3D/2 OC Connector - Outdoor

Order Designation	Material composition	Technical data	Sales pack quantity	Item number	
MT-C-T 3D/2 OC	Q355 or better steel	Outdoor, low to moderate pollution (C3 / C4 - low)	10 pc	**2272059**	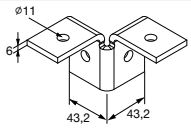

MT Open C-Channel Connectors

MT-C-T 3D/3 OC Connector - Outdoor

Order Designation	Material composition	Technical data	Sales pack quantity	Item number	
MT-C-T 3D/3 OC	Q355 or better steel	Outdoor, low to moderate pollution (C3 / C4 - low)	10 pc	**2272061**	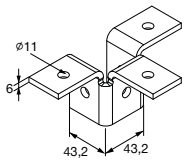

MT-C-T A OC Connector - Outdoor

Order Designation	Material composition	Technical data	Sales pack quantity	Item number	
MT-C-T A OC	Q355 or better steel	Outdoor, low to moderate pollution (C3 / C4 - low)	20 pc	**2272057**	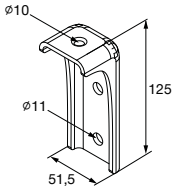

MT Open C-Channel Connectors

Technical data Connector

Item image	Load drawing	Order Designation	+ Fz	- Fz	± Fx	± Fy
	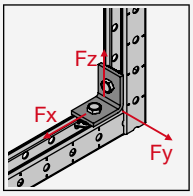	**MT-C-L1 / MT-C-L1 OC**	4,0 kN	3,3 kN	3,3 kN	-
	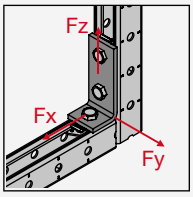	**MT-C-L2 / MT-C-L2 OC**	8,8 kN	5,7 kN	2,8 kN	1,1 kN
	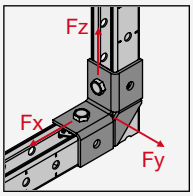	**MT-C-LL1 / MT-C-LL1 OC**	5,9 kN	5,8 kN	5,8 kN	0,9 kN
	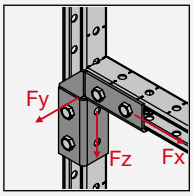	**MT-C-LL2 / MT-C-LL2 OC**	4,6 kN	4,1 kN	4,1 kN	0,6 kN

Design notes
- Shown load values are recommended values with partial safety factors for actions and resistance included
- Design value = 1.4 * recommended value
- The design resistance of the products is defined in accordance with EN1993

MT Open C-Channel Connectors

90° Connectors

4

Technical data Connector

Item image	Load drawing	Order Designation	+ Fz	- Fz	± Fx	± Fy
	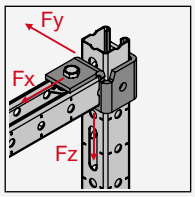	**MT-C-T/1 / MT-C-T/1 OC**	2,8 kN	3,9 kN	4,6 kN	0,9 kN
	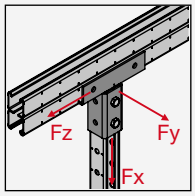	**MT-C-T/2 / MT-C-T/2 OC**	2,6 kN	2,6 kN	8,1 kN	1,1 kN
	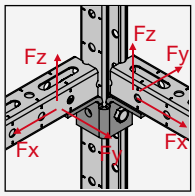	**MT-C-T 3D/2 / MT-C-T 3D/2 OC**	2,6 kN	1,5 kN	1,6 kN	0,5 kN
	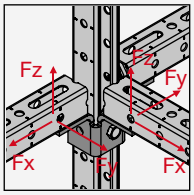	**MT-C-T 3D/3 / MT-C-T 3D/3 OC**	2,2 kN	2,2 kN	3,6 kN	0,8 kN
	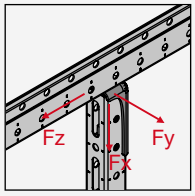	**MT-C-T A / MT-C-T A OC**	2,0 kN	2,0 kN	6,3 kN	2,0 kN

Design notes
- Shown load values are recommended values with partial safety factors for actions and resistance included
- Design value = 1.4 * recommended value
- The design resistance of the products is defined in accordance with EN1993

4

MT Open C-Channel Connectors

90° Connectors

Operation Instruction

MT-C-L1 / MT-C-L1 OC

2288322-06.2020

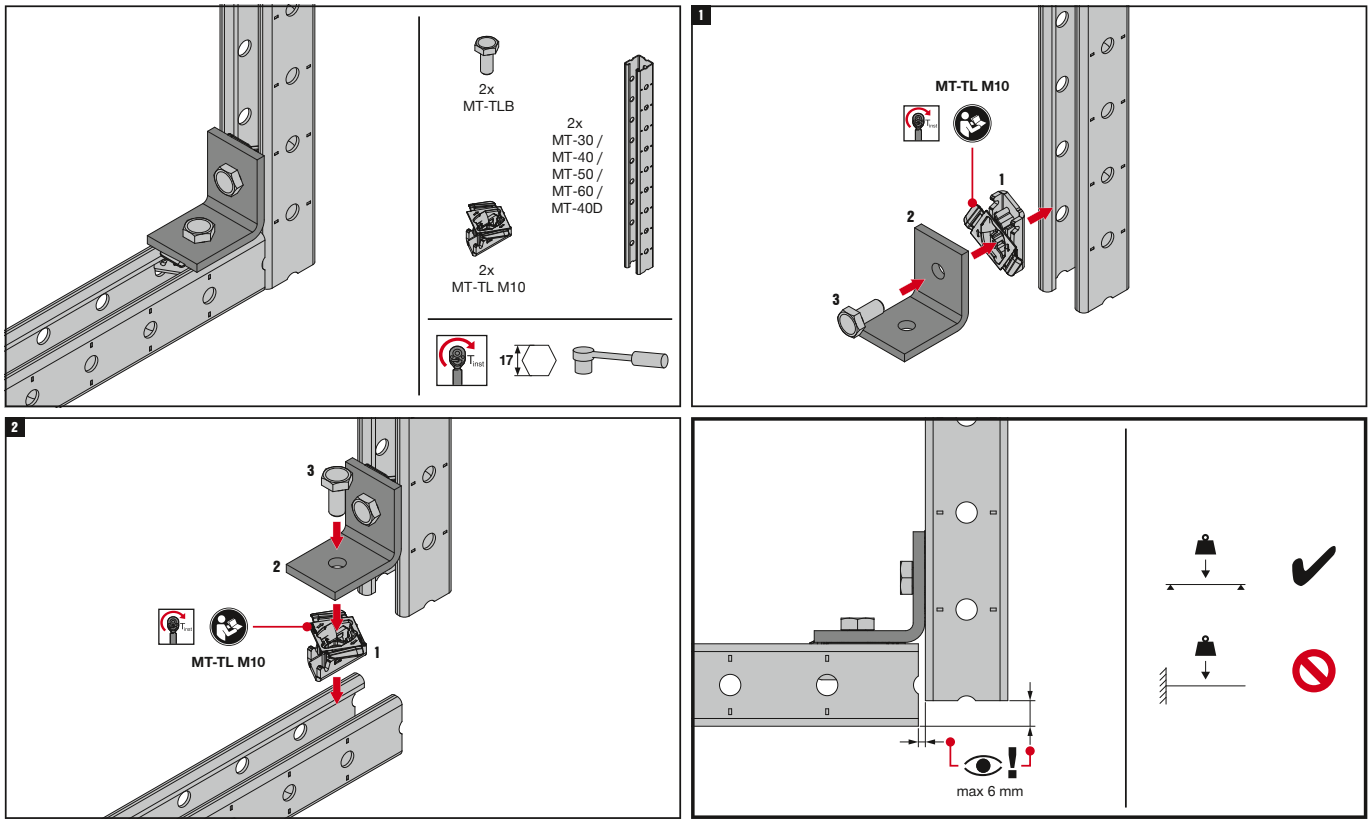

The latest IFU (Instruction For Use) is available on Hilti Online. Please check for any revisions before installing the product.

MT-C-L2 / MT-C-L2 OC

2288323-07.2020

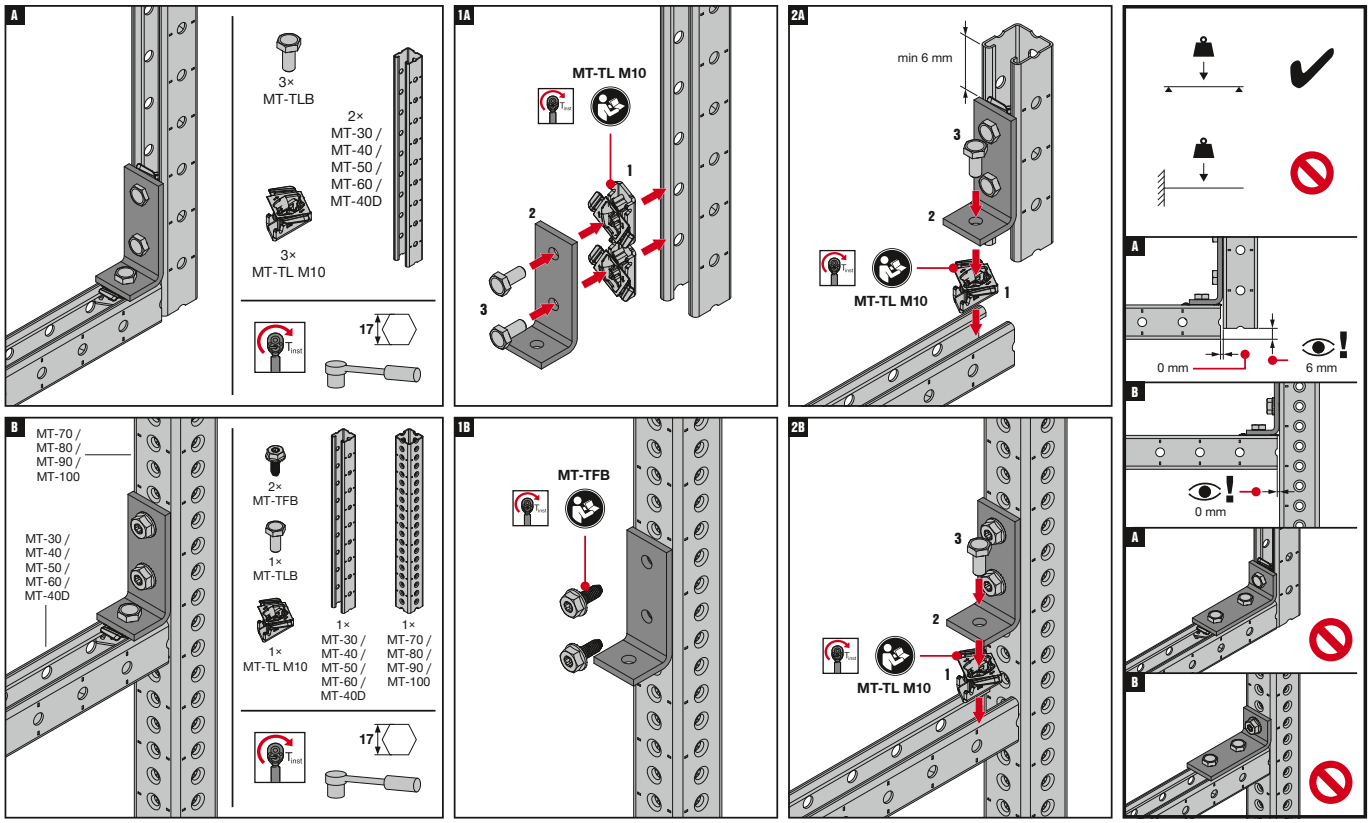

The latest IFU (Instruction For Use) is available on Hilti Online. Please check for any revisions before installing the product.

4

MT Open C-Channel Connectors

90° Connectors

Operation Instruction

MT-C-LL1 / MT-C-LL1 OC

2288324-09.2020

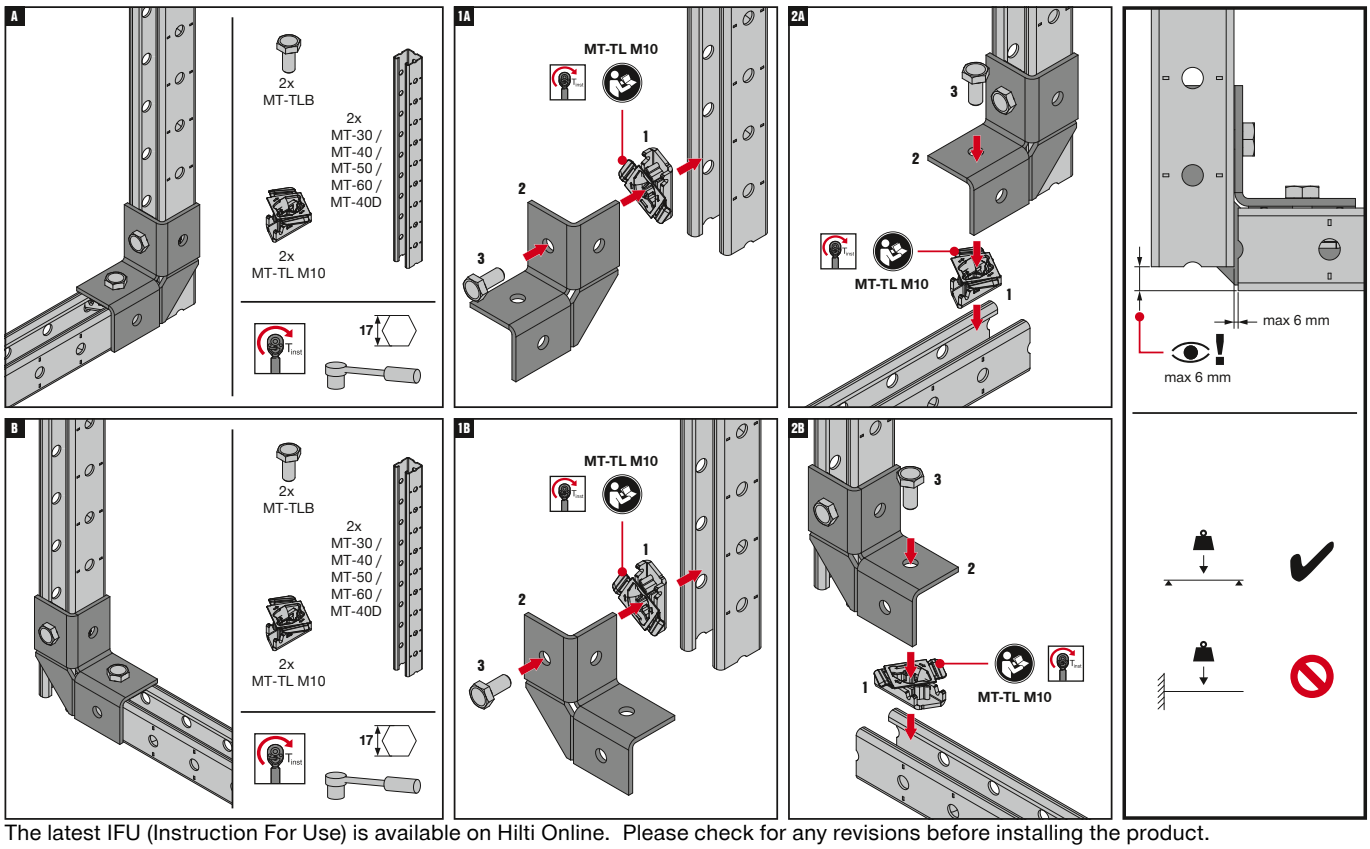

The latest IFU (Instruction For Use) is available on Hilti Online. Please check for any revisions before installing the product.

MT-C-LL2 / MT-C-LL2 OC

2288325-06.2020

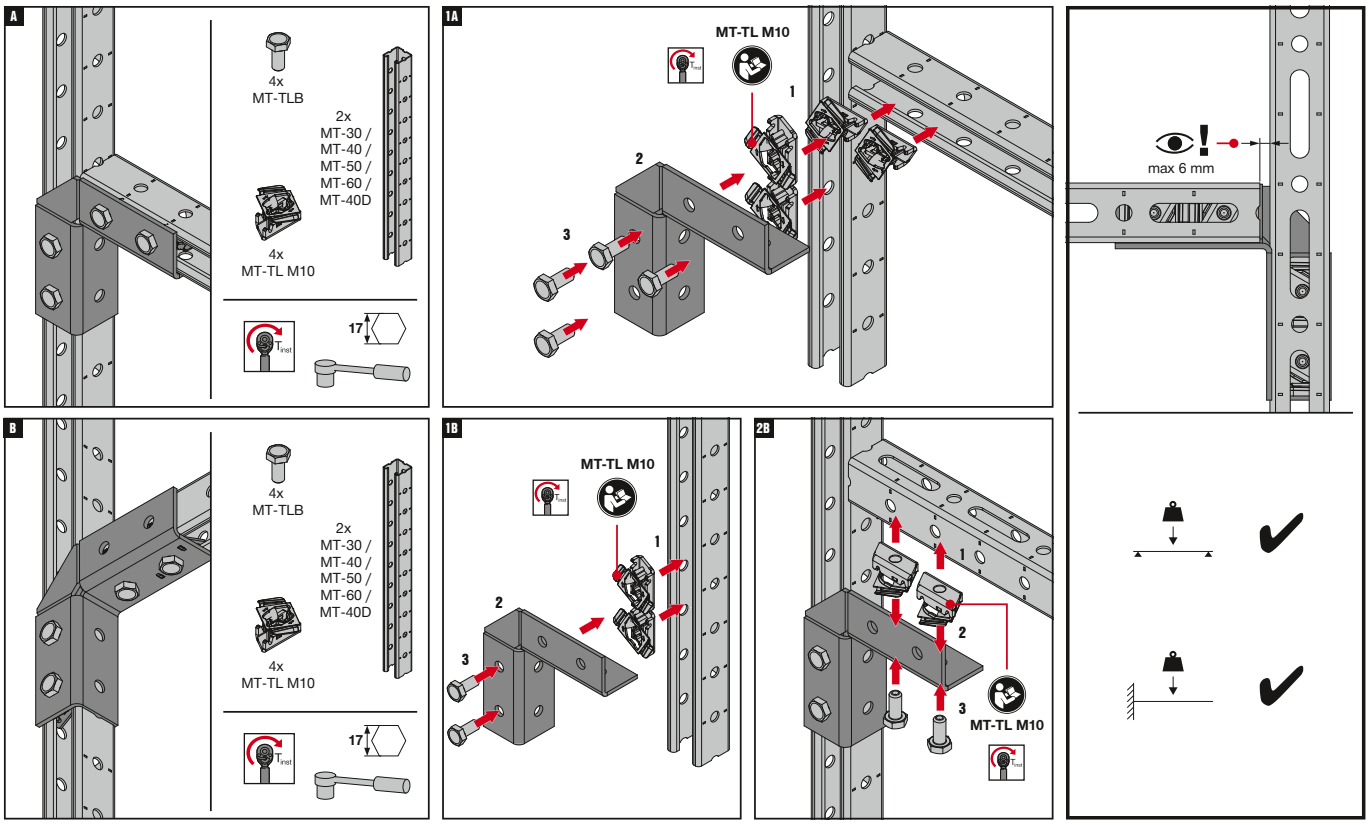

The latest IFU (Instruction For Use) is available on Hilti Online. Please check for any revisions before installing the product.

4

MT Open C-Channel Connectors
Channel Ties

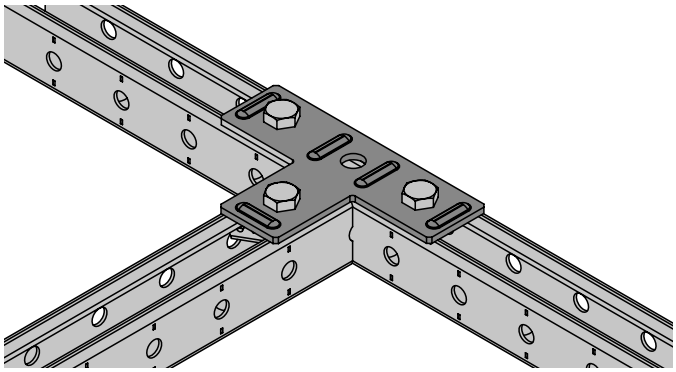

Applications

- Connecting two MT C-Channels together
- Compatible with multiple MT C-Channels
- Suitable for use in dry, indoor environments

Advantages

- Adjustable – easily fit and repositioned along C-Channels
- Compatible with Twist-Lock Channel connectors – for much faster, adaptable assembly

Technical data

Material composition	Q235 or better steel
Surface finish	Indoor Coated - Electro galvanized

MT-CT-H2 Channel Tie

Order Designation	Technical data	Sales pack quantity	Item number	
MT-CT-H2	Dry indoor conditions (C1) Indoor with temporary condensation (C2)	15 pc	**2322405**	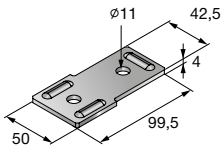

MT-CT-H4 Channel Tie

Order Designation	Technical data	Sales pack quantity	Item number	
MT-CT-H4	Dry indoor conditions (C1) Indoor with temporary condensation (C2)	15 pc	**2322408**	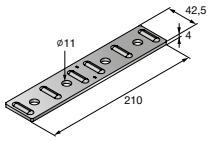

MT Open C-Channel Connectors
Channel Ties

MT-CT-H5 Channel Tie

Order Designation	Technical data	Sales pack quantity	Item number	
MT-CT-H5	Dry indoor conditions (C1) Indoor with temporary condensation (C2)	8 pc	**2322406**	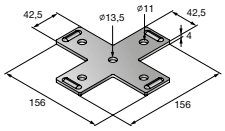

MT-CT-T Channel Tie

Order Designation	Technical data	Sales pack quantity	Item number	
MT-CT-T	Dry indoor conditions (C1) Indoor with temporary condensation (C2)	12 pc	**2322407**	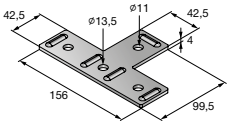

MT Open C-Channel Connectors

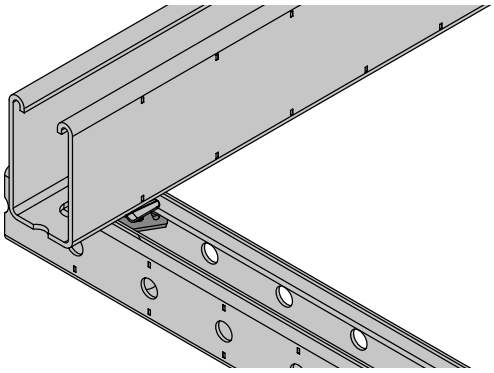

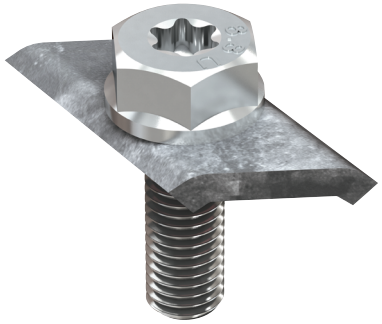

Applications

- Fastening horizontal MT C-Channel to vertical MT box profiles, such as for integrated raised floors in data centers
- Suitable for use in dry, indoor environments

Advantages

- Part of the Hilti MT system – an economical, all-in-one solution for virtually all modular MEP support structures
- To be used with the MT-C-T A connector

Technical data

Material composition	see detailed table
Surface finish	see detailed table

MT-C-T A Connector

Order Designation	Material composition	Surface finish	Technical data	Sales pack quantity	Item number	
MT-C-T A	Q355 or better steel	Pre-galvanized - for dry indoor use only	Dry indoor conditions (C1) Indoor with temporary condensation (C2)	20 pc	**2272056**	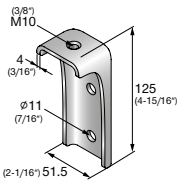

MT-CTAB Connector Bolt

Order Designation	Material composition	Surface finish	Technical data	Sales pack quantity	Item number	
MT-CTAB	Q355 or better steel	Indoor Coated - Electro galvanized	Dry indoor conditions (C1) Indoor with temporary condensation (C2)	100pc	**2332797**	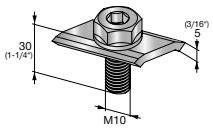

4

MT Open C-Channel Connectors - Outdoor

Channel Ties

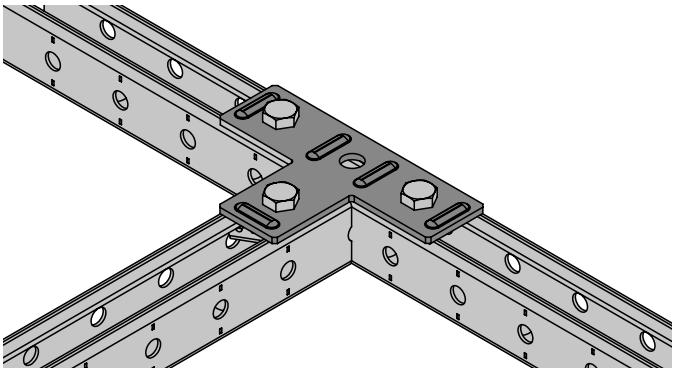

Applications

- Connecting two MT C-Channels together
- Suitable for use in moderately corrosive environments

Advantages

- Adjustable – easily fit and repositioned along C-Channels
- Compatible with Twist-Lock Channel connectors – for much faster, adaptable assembly

Technical data

Material composition	Q235 or better steel
Surface finish	Outdoor Coated - HDG

MT-CT-H2 OC Channel Tie - Outdoor

Order Designation	Technical Data	Sales pack quantity	Item number	
MT-CT-H2 OC	Outdoor, low to moderate pollution (C3 / C4 - low)	15 pc	**2322409**	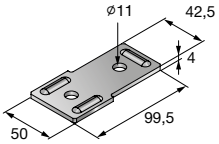

MT-CT_H4 OC Channel Tie - Outdoor

Order Designation	Technical Data	Sales pack quantity	Item number	
MT-CT-H4 OC	Outdoor, low to moderate pollution (C3 / C4 - low)	15 pc	**2322412**	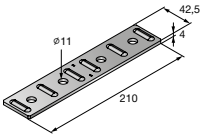

MT Open C-Channel Connectors - Outdoor

Channel Ties

4

MT-CT-T OC Channel Tie - Outdoor

Order Designation	Technical Data	Sales pack quantity	Item number	
MT-CT-T OC	Outdoor, low to moderate pollution (C3 / C4 - low)	12 pc	**2322411**	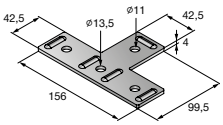

MT-CT-H5 OC Channel Tie - Outdoor

Order Designation	Technical Data	Sales pack quantity	Item number	
MT-CT-H5 CO	Outdoor, low to moderate pollution (C3 / C4 - low)	8 pc	**2322410**	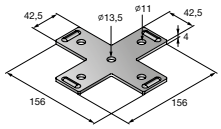

MT Open C-Channel Connectors

Connectors - Outdoor

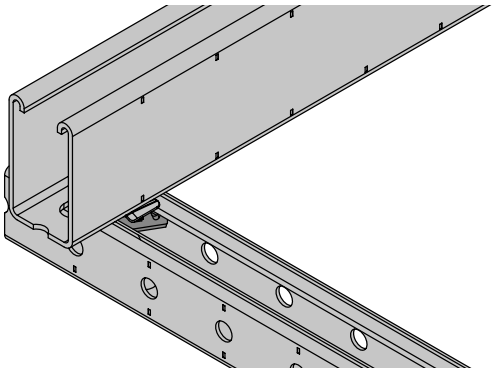

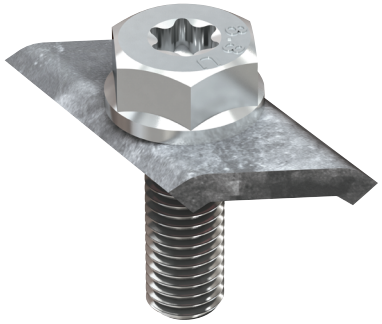

Applications

- Connecting two MT C-Channels together
- Suitable for use in moderately corrosive environments

Advantages

- Adjustable – easily fit and repositioned along C-Channels
- To be used with the MT-C-T A connector

Technical data

Material composition	Q235 or better steel
Surface finish	Outdoor Coated - HDG

MT-C-T A OC Connector - Outdoor

Order Designation	Material composition	Technical data	Sales pack quantity	Item number	
MT-C-T A OC	Q355B – GB/T 700	Outdoor, low to moderate pollution (C3 / C4 - low)	20 pc	**2272057**	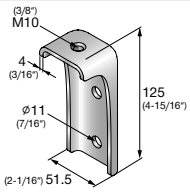

MT-CTAB OC Connector Bolt - Outdoor

Order Designation	Material composition	Technical data	Sales pack quantity	Item number	
MT-CTAB OC	Q235 or better steel	Outdoor, low to moderate pollution (C3 / C4 - low)	100 pc	**2332788**	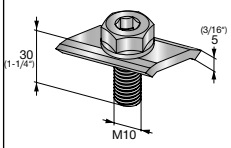

MT Open C-Channel Connectors
Channel Ties

Technical data MT Channel Ties

Item image	Load drawing	Order Designation	+ Fz	± Fx	± Fy
	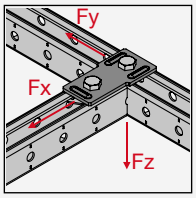	**MT-CT-H2 / MT-CT-H2 OC**	1,8 kN	2,6 kN	1,8 kN
	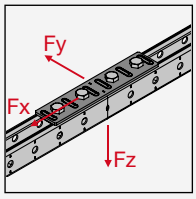	**MT-CT-H4 / MT-CT-H4 OC**	5,7 kN	5,0 kN	3,6 kN
	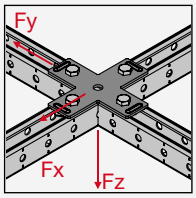	**MT-CT-H5 / MT-CT-H5 OC**	2,6 kN	3,4 kN	3,4 kN
	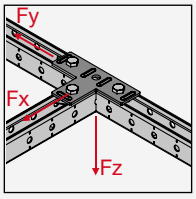	**MT-CT-T / MT-CT-T OC**	2,3 kN	5,1 kN	1,6 kN

Design notes
- Shown load values are recommended values with partial safety factors for actions and resistance included
- Design value = 1.4 * recommended value
- The design resistance of the products is defined in accordance with EN1993

Technical Data MT Channel Connector

Item image	Load drawing	Order Designation	+ Fz	- Fz	± Fx	± Fy
	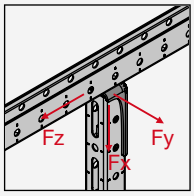	**MT-C-T A / MT-C-T A OC**	2,0 kN	2,0 kN	10,0 kN	2,0 kN

Design notes
- Shown load values are recommended values with partial safety factors for actions and resistance included
- Design value = 1.4 * recommended value
- The design resistance of the products is defined in accordance with EN1993

4

MT Open C-Channel Connectors
Channel Ties

Operation Instruction
MT-CT-H2

2325257-04.2021

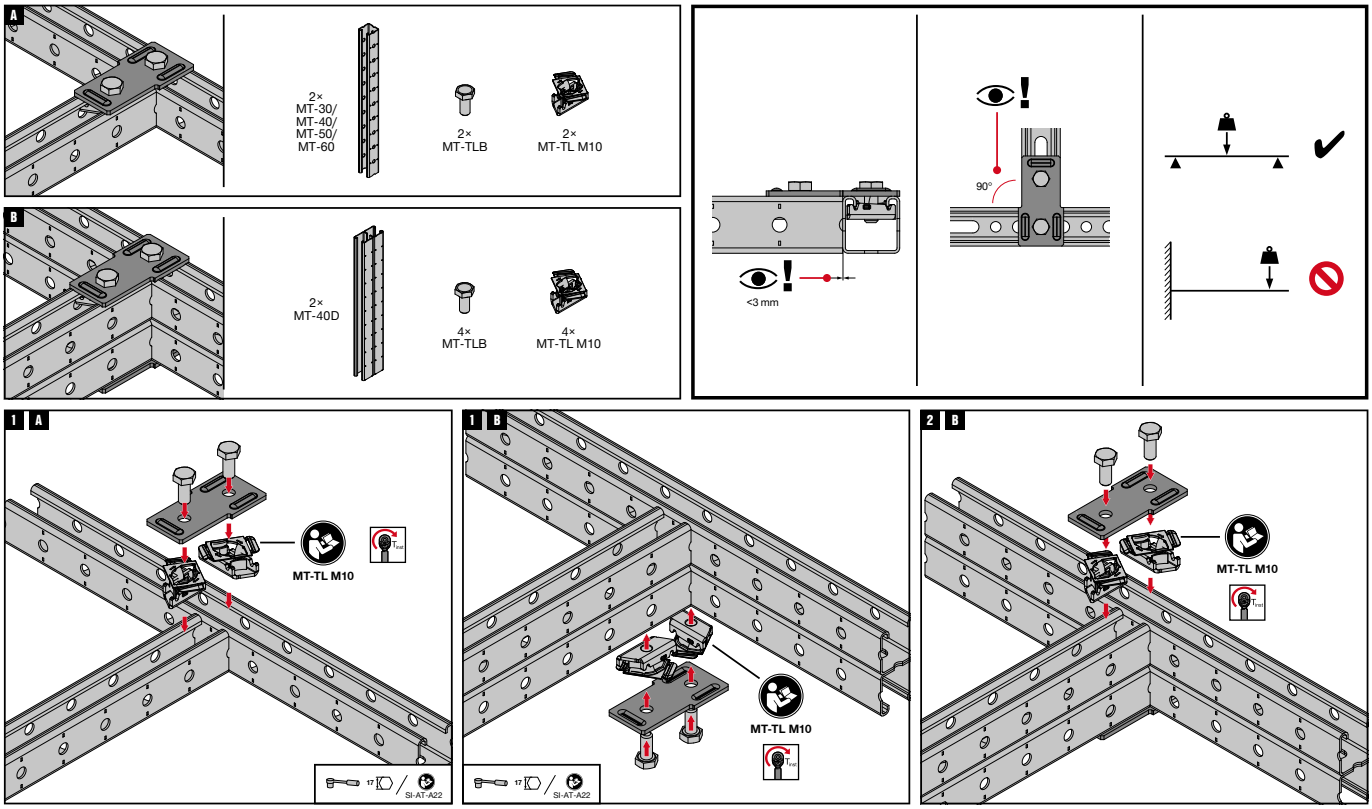

The latest IFU (Instruction For Use) is available on Hilti Online. Please check for any revisions before installing the product.

MT-CT-H4

2327511-04.2021

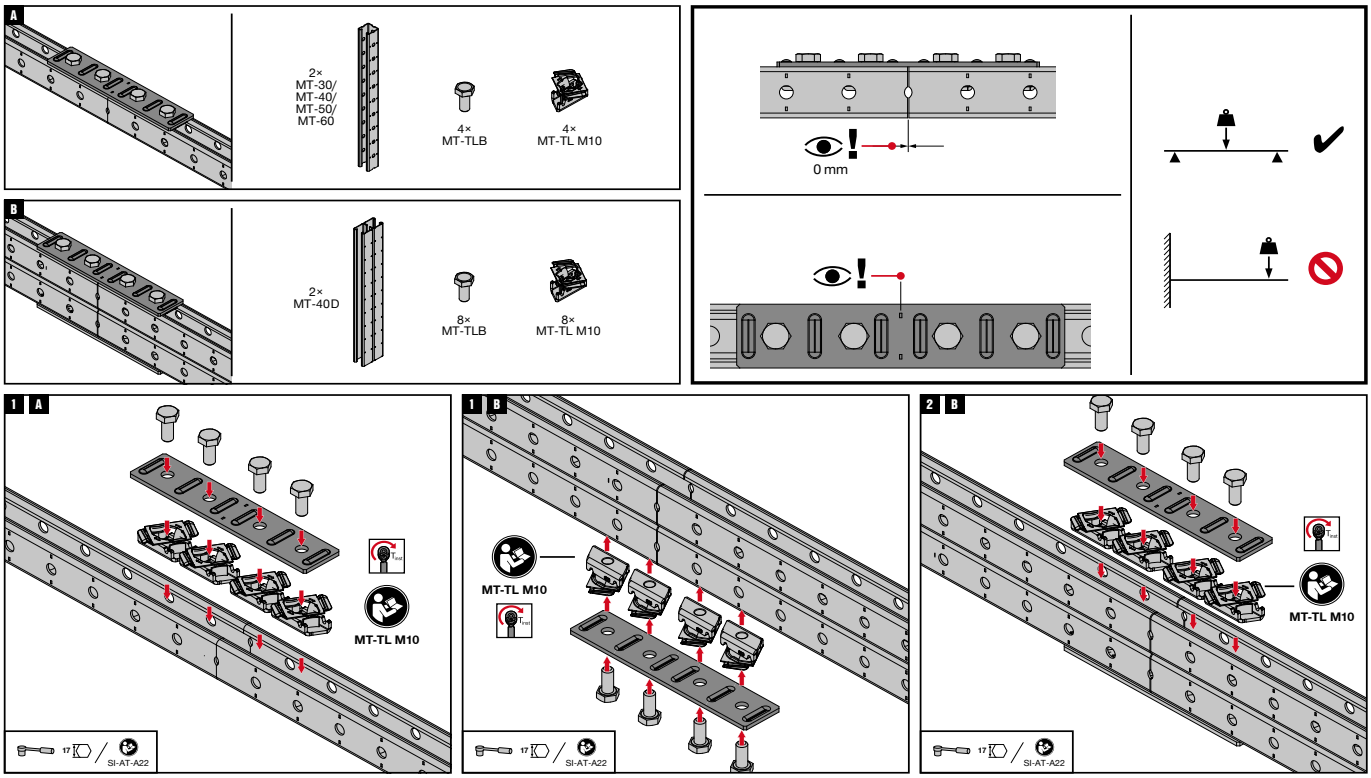

The latest IFU (Instruction For Use) is available on Hilti Online. Please check for any revisions before installing the product.

4

MT Open C-Channel Connectors
Channel Ties

Operation Instruction
MT-CT-H5

2325301-04.2021

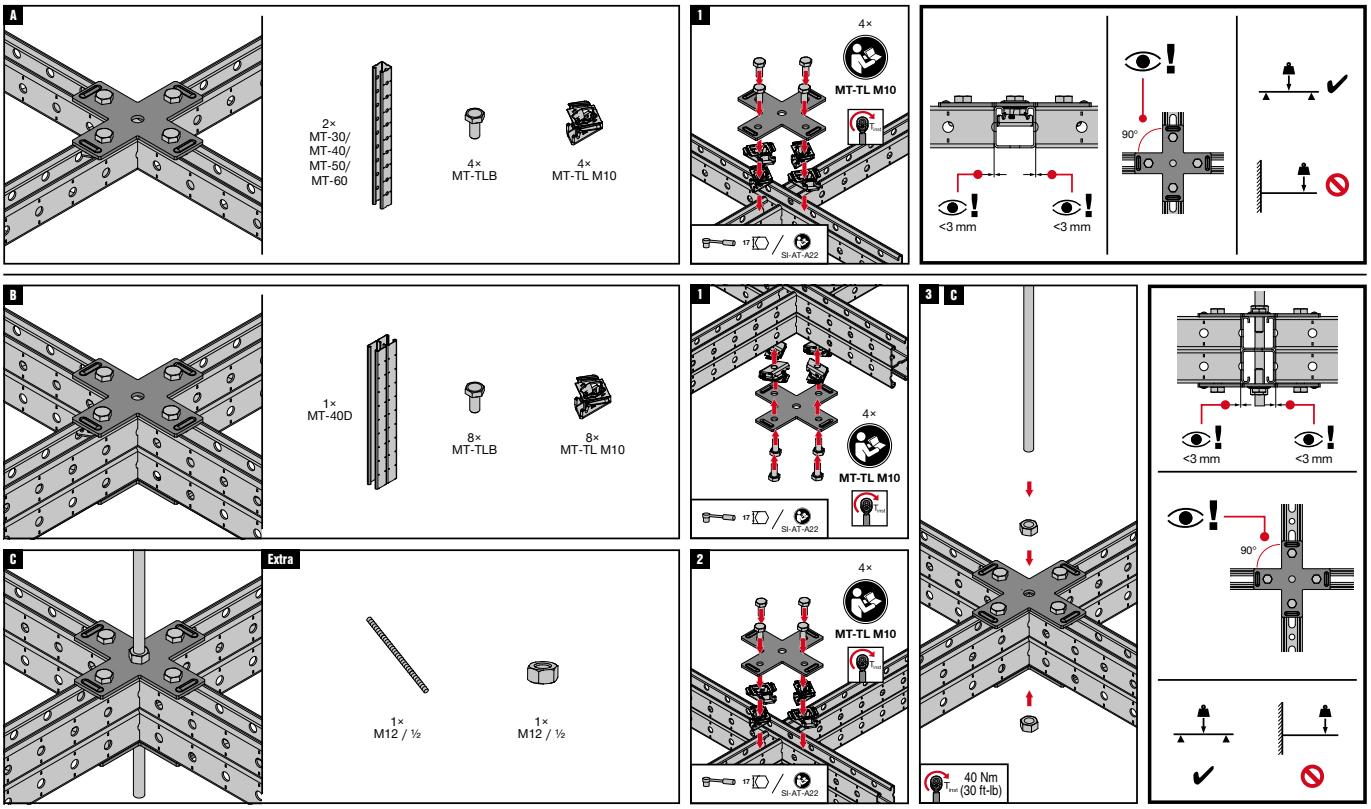

The latest IFU (Instruction For Use) is available on Hilti Online. Please check for any revisions before installing the product.

Operation Instruction
MT-CT-T

2325310-04.2021

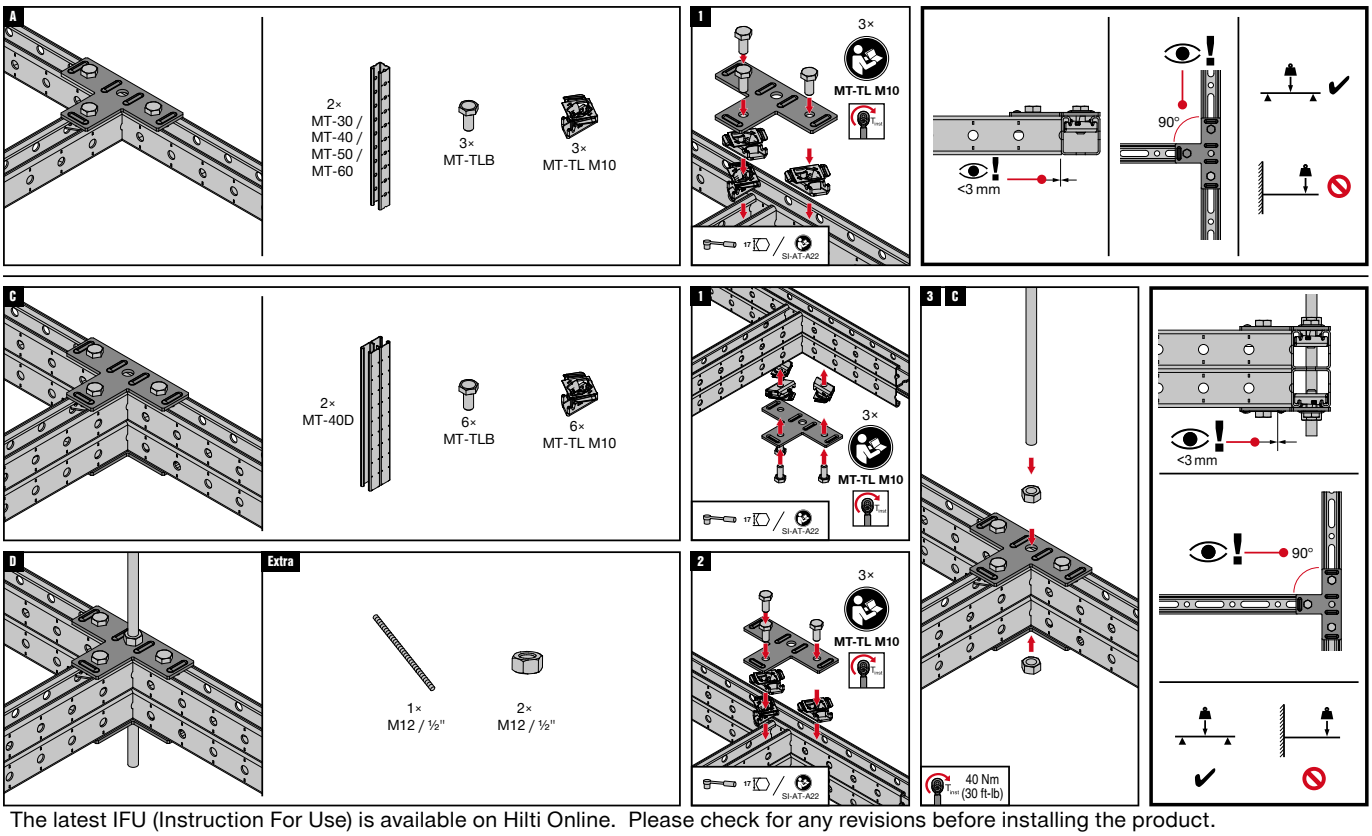

The latest IFU (Instruction For Use) is available on Hilti Online. Please check for any revisions before installing the product.

MT Open C-Channel Connectors

Operation Instruction

MT-C-T A / MT-C-T A OC

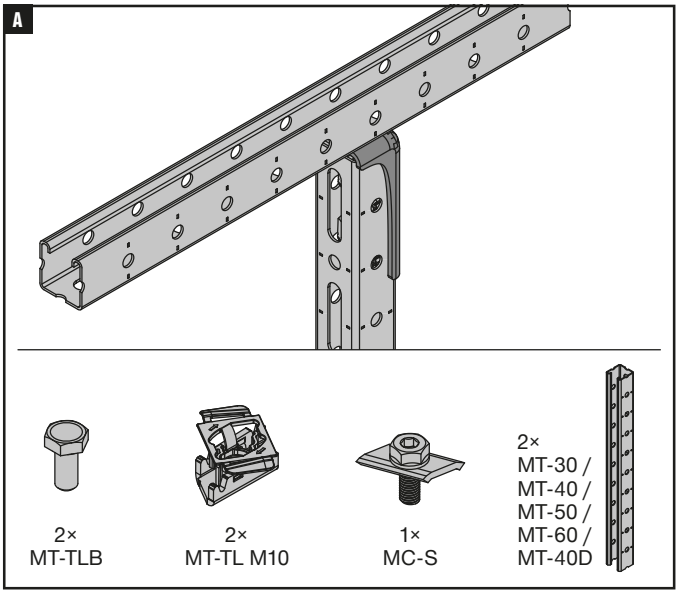

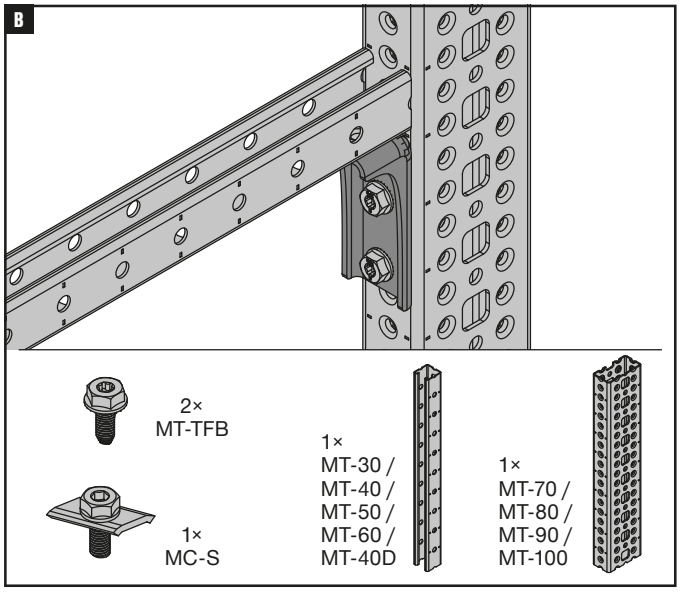

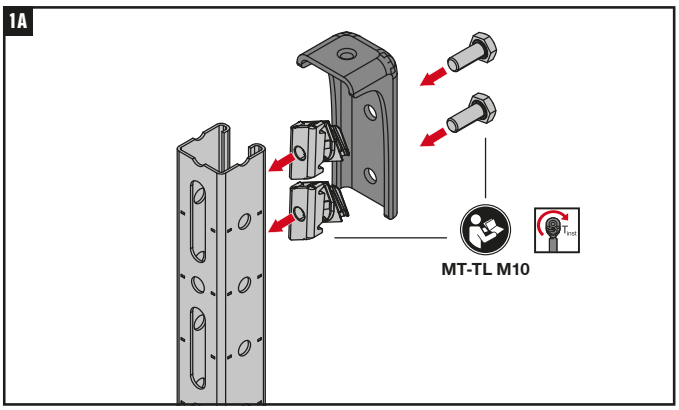

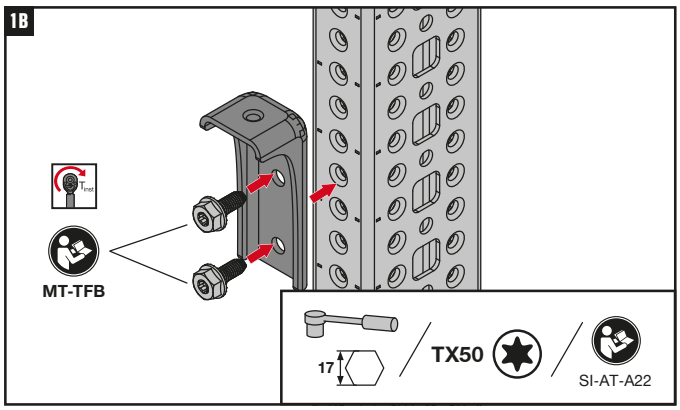

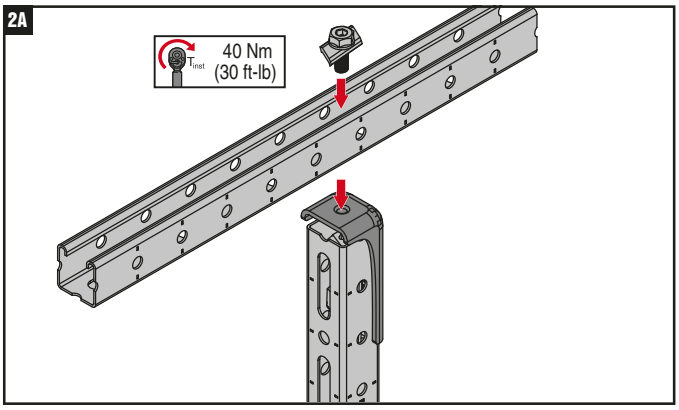

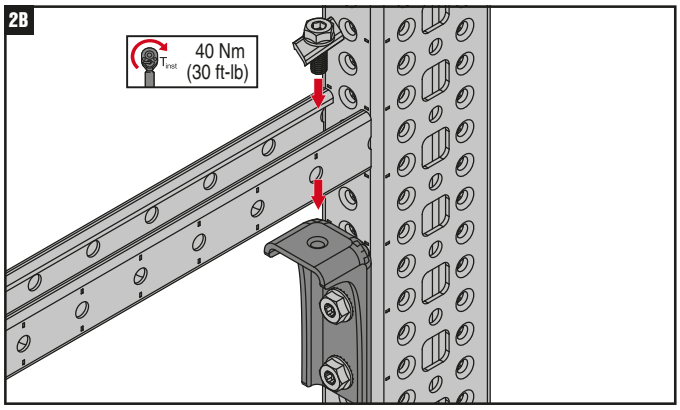

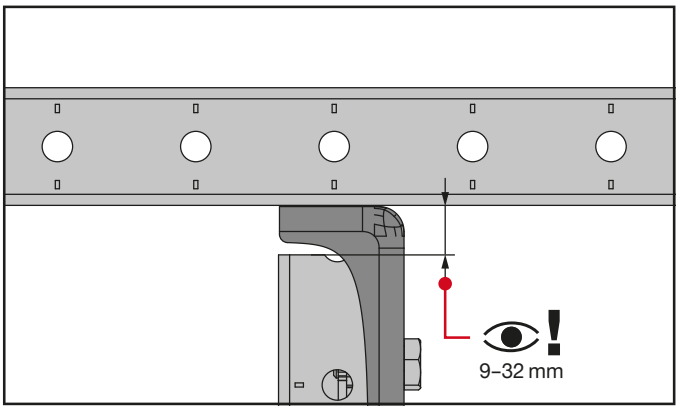

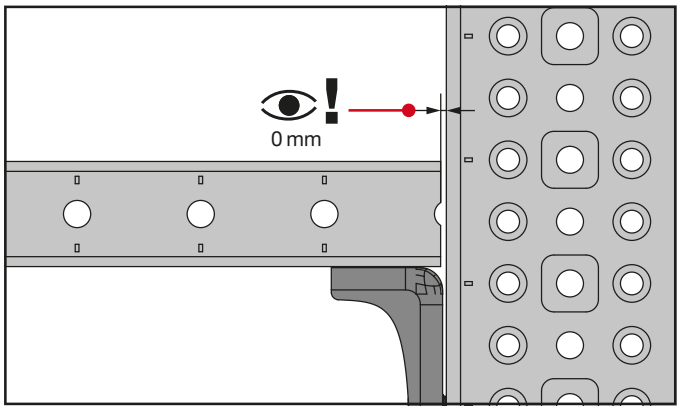

The latest IFU (Instruction For Use) is available on Hilti Online. Please check for any revisions before installing the product.

MT Open C-Channel Connectors

4

Operation Instruction
MT-CTAB / MT-CTAB OC

2334482-07.2021

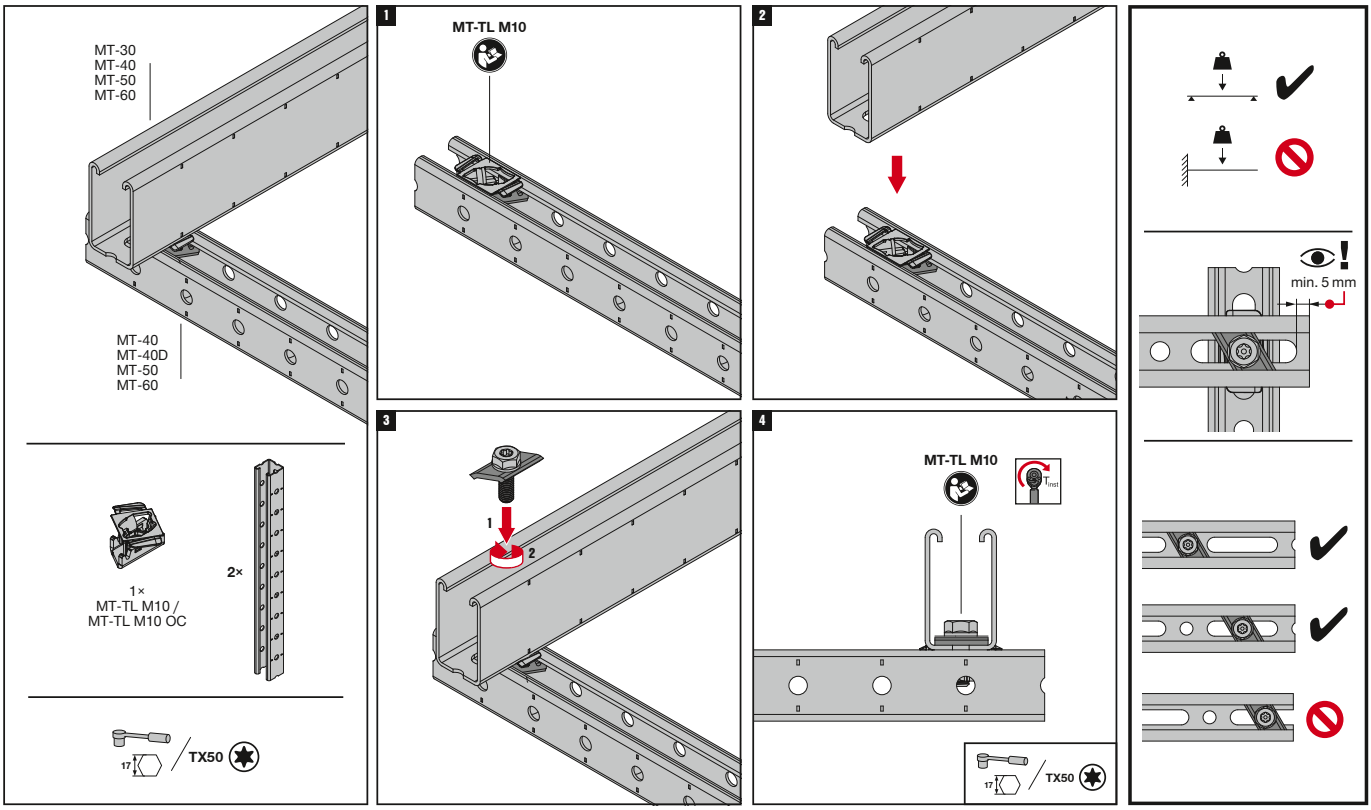

The latest IFU (Instruction For Use) is available on Hilti Online. Please check for any revisions before installing the product.

4

MT Open C-Channel Connectors
Splice Connectors

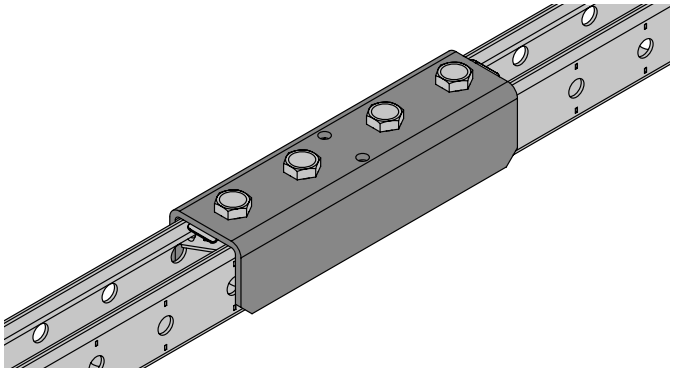

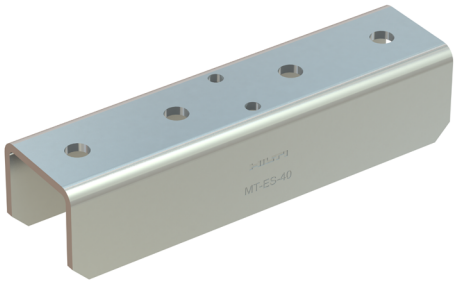

Applications

- Extending MT C-Channels by fastening them together end-to-end
- Assembling metal framing for MEP support structures when longer spans or increased floor/ceiling clearance are required
- Suitable for use in dry, indoor environments

Advantages

- Part of the Hilti MT system – an economical, all-in-one solution for virtually all modular MEP support structures
- Easy to install – compatible with the Hilti MT Twist-Lock, a faster alternative to spring nuts for assembling a modular support system
- Adaptable – unlike welding, angle brackets allow you to modify C-Channel framing during installation and for future MEP requirements

Technical data

Material composition	Q235 or better steel
Surface finish	Pre-galvanized - for dry indoor use only

MT-ES-40 Splice Connector

Order Designation	Technical data	Sales pack Quantity	Item number	
MT-ES-40	Dry indoor conditions (C1) Indoor with temporary condensation (C2)	12 pc	**2272062**	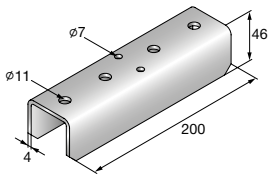

MT-ES-60 Splice Connector

Order Designation	Technical data	Sales pack Quantity	Item number	
MT-ES-60	Dry indoor conditions (C1) Indoor with temporary condensation (C2)	8 pc	**2322415**	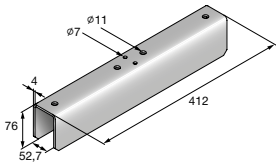

MT Open C-Channel Connectors
Splice Connectors - Outdoor

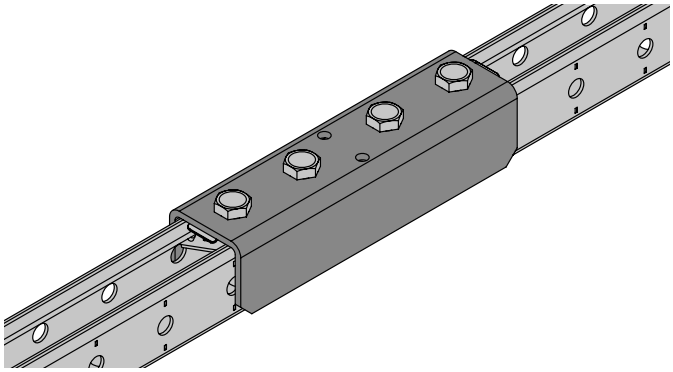

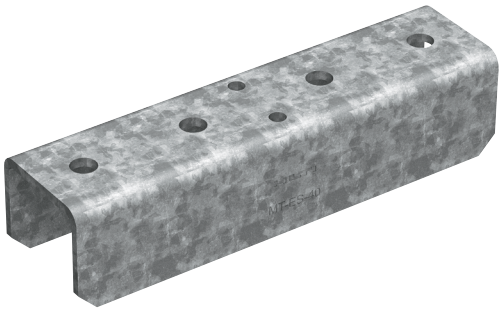

Applications

- Extending MT C-Channels by fastening them together end-to-end
- Assembling metal framing for MEP support structures when longer spans or increased floor/ceiling clearance are required
- Suitable for use in moderately corrosive environments

Advantages

- Part of the Hilti MT system – an economical, all-in-one solution for virtually all modular MEP support structures
- Easy to install – compatible with the Hilti MT Twist-Lock, a faster alternative to spring nuts for assembling a modular support system
- Adaptable – unlike welding, angle brackets allow you to modify C-Channel framing during installation and for future MEP requirements

Technical data

Material composition	Q235 or better steel
Surface finish	Hot-dip galvanized - for outdoor use

MT-ES-40 OC Splice Connector - Outdoor

Order Designation	Technical data	Sales pack Quantity	Item number	
MT-ES-40 OC	Outdoor, low to moderate pollution (C3 / C4 - low)	12 pc	**2272063**	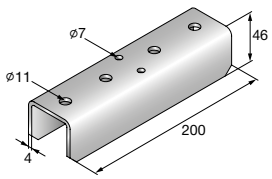

MT-ES-60 OC Splice Connector - Outdoor

Order Designation	Technical data	Sales pack Quantity	Item number	
MT-ES-60 OC	Outdoor, low to moderate pollution (C3 / C4 - low)	8 pc	**2322416**	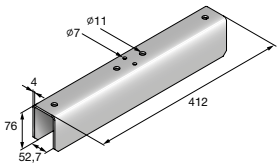

MT Open C-Channel Connectors
Splice Connectors

Technical data MT Splice Connector

Item image	Load drawing	Order Designation	+ Fz	- Fz	± Fx	± Fy	± My
	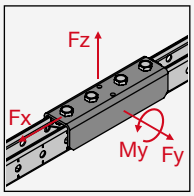	**MT-ES-40 / MT-ES-40 OC**	10,0 kN	10,0 kN	10,0 kN	0,6 kN	0,3 kNm
	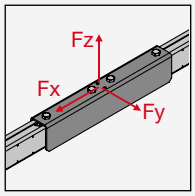	**MT-ES-60 / MT-ES-60 OC**	4,3 kN	3,9 kN	10,0 kN	1,1 kN	

Design notes
- Shown load values are recommended values with partial safety factors for actions and resistance included
- Design value = 1.4 * recommended value
- The design resistance of the products is defined in accordance with EN1993

MT Open C-Channel Connectors
Splice Connectors

4

Operation Instruction
MT-ES-40 / MT-ES-40 OC

2288189-06.2020

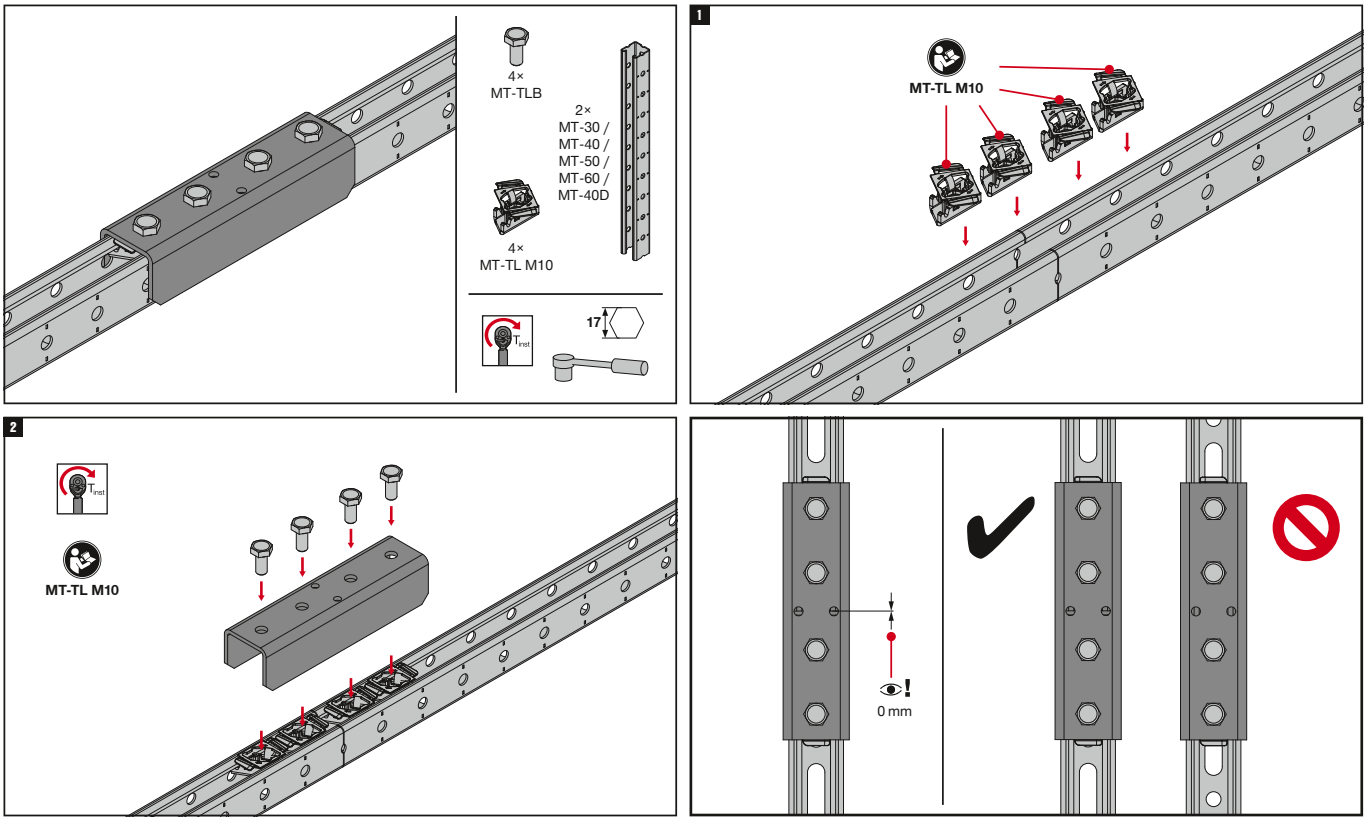

The latest IFU (Instruction For Use) is available on Hilti Online. Please check for any revisions before installing the product.

MT-ES-60

2325098-04.2021

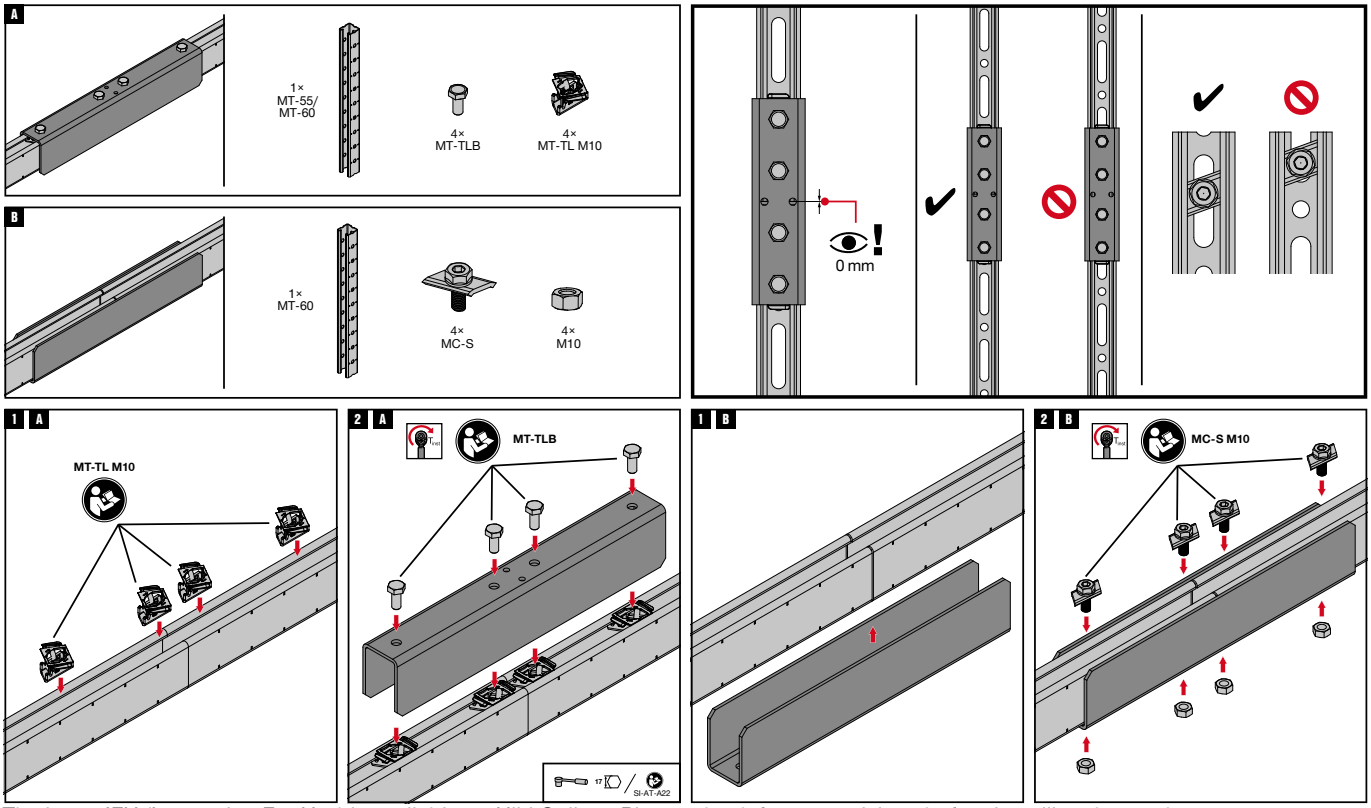

The latest IFU (Instruction For Use) is available on Hilti Online. Please check for any revisions before installing the product.

MT Open C-Channel Connectors
Long Span Bracing

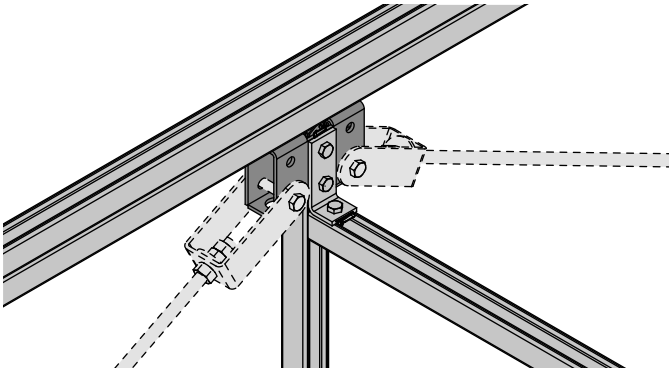

Applications

- Assembling and bracing modular support structures with longer spans

Advantages

- High load capacity – designed for threaded rod bracing for increased rigidity over long spans
- Part of the Hilti MT system – an economical, all-in-one solution for virtually all modular MEP support structures

Technical data

Material composition	Q235 or better steel
Surface finish	Indoor Coated - Electro galvanized

MT-C-LS Connector

Order Designation	Technical data	Sales pack Quantity	Item number	
MT-C-LS	Dry indoor conditions (C1) Indoor with temporary condensation (C2)	10 pc	**2322419**	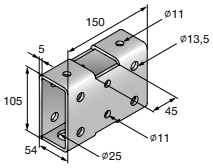

MT Open C-Channel Connectors
Long Span Bracing

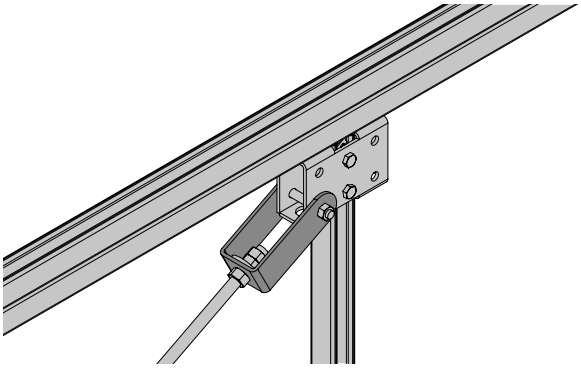

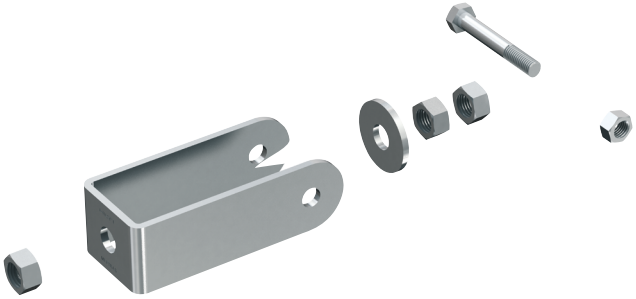

Applications

- Bracing modular support structures with longer spans

Advantages

- High load capacity – designed for threaded rod bracing for increased rigidity over long spans
- Part of the Hilti MT system – an economical, all-in-one solution for virtually all modular MEP support structures

Technical data

Material composition	Q235 or better steel
Surface finish	Indoor Coated - Electro galvanized

MT-FTR-LS Brace Connector

Order Designation	Technical data	Sales pack Quantity	Item number	
MT-FTR-LS	Dry indoor conditions (C1) Indoor with temporary condensation (C2)	1 pc	**2322421**	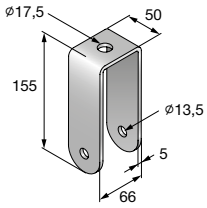

Technical data Long span bracing

Item image	Load drawing	Order Designation	+ Fz	- Fz	± Fx	± Fy
	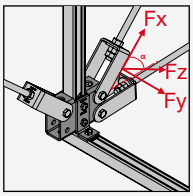	**MT-C-LS + MT-FTR-LS**	-	-	10,0 kN	-

Design notes
- Shown load values are recommended values with partial safety factors for actions and resistance included
- Design value = 1.4 * recommended value
- The design resistance of the products is defined in accordance with EN1993

MT Open C-Channel Connectors
Long Span Bracing

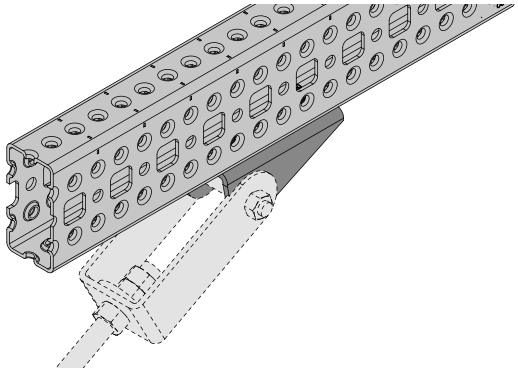

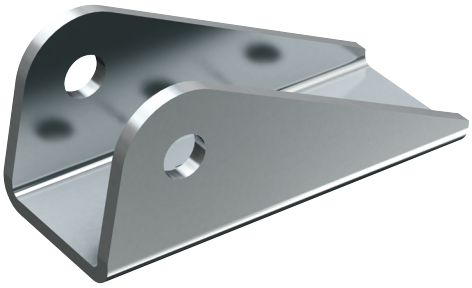

Applications

- Assembling and bracing modular support structures with longer spans

Advantages

- High load capacity – designed for threaded rod bracing for increased rigidity over long spans
- Part of the Hilti MT system – an economical, all-in-one solution for virtually all modular MEP support structures

Technical data

Material composition	Q235 or better steel
Surface finish	Indoor Coated - Electro galvanized

MT-AB-LS Brace Connector

Order Designation	Profile	Technical data	Sales pack Quantity	Item number	
MT-AB-LS	MT-40D OC MT-70 MT-80	Dry indoor conditions (C1) Indoor with temporary condensation (C2)	24 pc	**2322420**	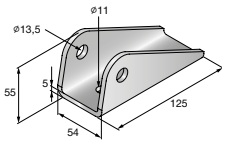

4

MT Open C-Channel Connectors
Long Span Bracing - Outdoor

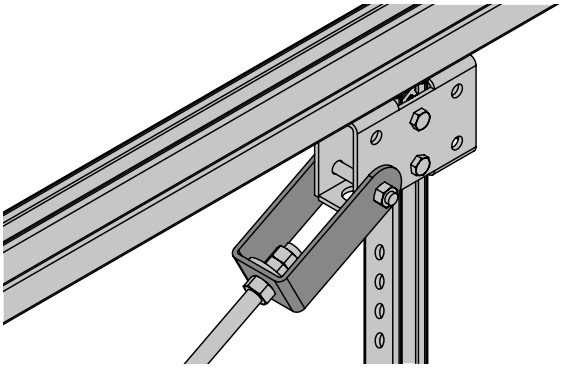

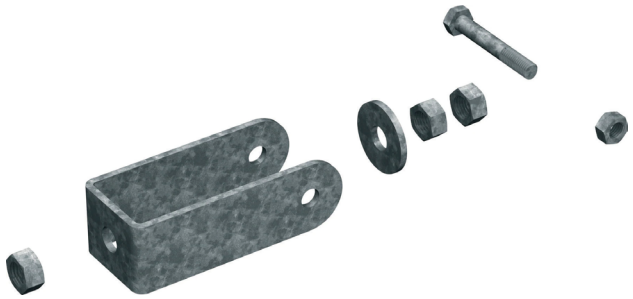

Applications

- Bracing modular support structures with longer spans

Advantages

- High load capacity – designed for threaded rod bracing for increased rigidity over long spans
- Part of the Hilti MT system – an economical, all-in-one solution for virtually all modular MEP support structures
- Corrosion resistance – hot-dip galvanized to help protect against moisture and chemical corrosion

Technical data

Material composition	Q235 or better steel
Surface finish	Outdoor Coated - HDG

MT-FTR-LS OC Brace Connector - Outdoor

Order Designation	Technical data	Sales pack Quantity	Item number	
MT-FTR-LS OC	Outdoor, low to moderate pollution (C3 / C4 - low)	1 pc	**2322424**	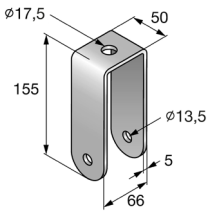

Technical data Long span bracing

Item image	Load drawing	Order Designation	+ Fz	- Fz	± Fx	± Fy
	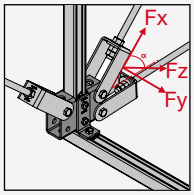	**MT-C-LS + MT-FTR-LS**	-	-	10,0 kN	-

Design notes
- Shown load values are recommended values with partial safety factors for actions and resistance included
- Design value = 1.4 * recommended value
- The design resistance of the products is defined in accordance with EN1993

MT Open C-Channel Connectors
Long Span Bracing - Outdoor

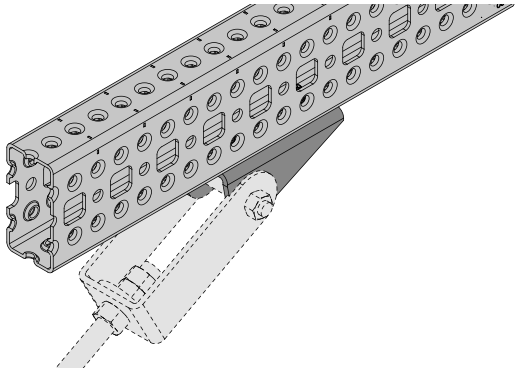

Applications

- Assembling and bracing modular support structures with longer spans

Advantages

- High load capacity – enables threaded rod bracing for increased rigidity over long spans
- Corrosion resistance – hot-dip galvanized to help protect against moisture and chemical corrosion
- Part of the Hilti MT system – an economical, all-in-one solution for virtually all modular MEP support structures

Technical data

Material composition	Q235 or better steel
Surface finish	Outdoor Coated - HDG

MT-AB-LS OC Brace Connector - Outdoor

Order Designation	Technical data	Sales pack Quantity	Item number	
MT-AB-LS OC	Outdoor, low to moderate pollution (C3 / C4 - low)	24 pc	**2322423**	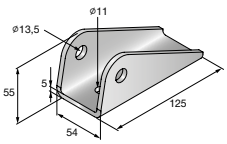

MT Open C-Channel Connectors

Long Span Bracing

4

Operation Instruction

MT-C-LS / MT-C-LS OC

2325258-04.2021

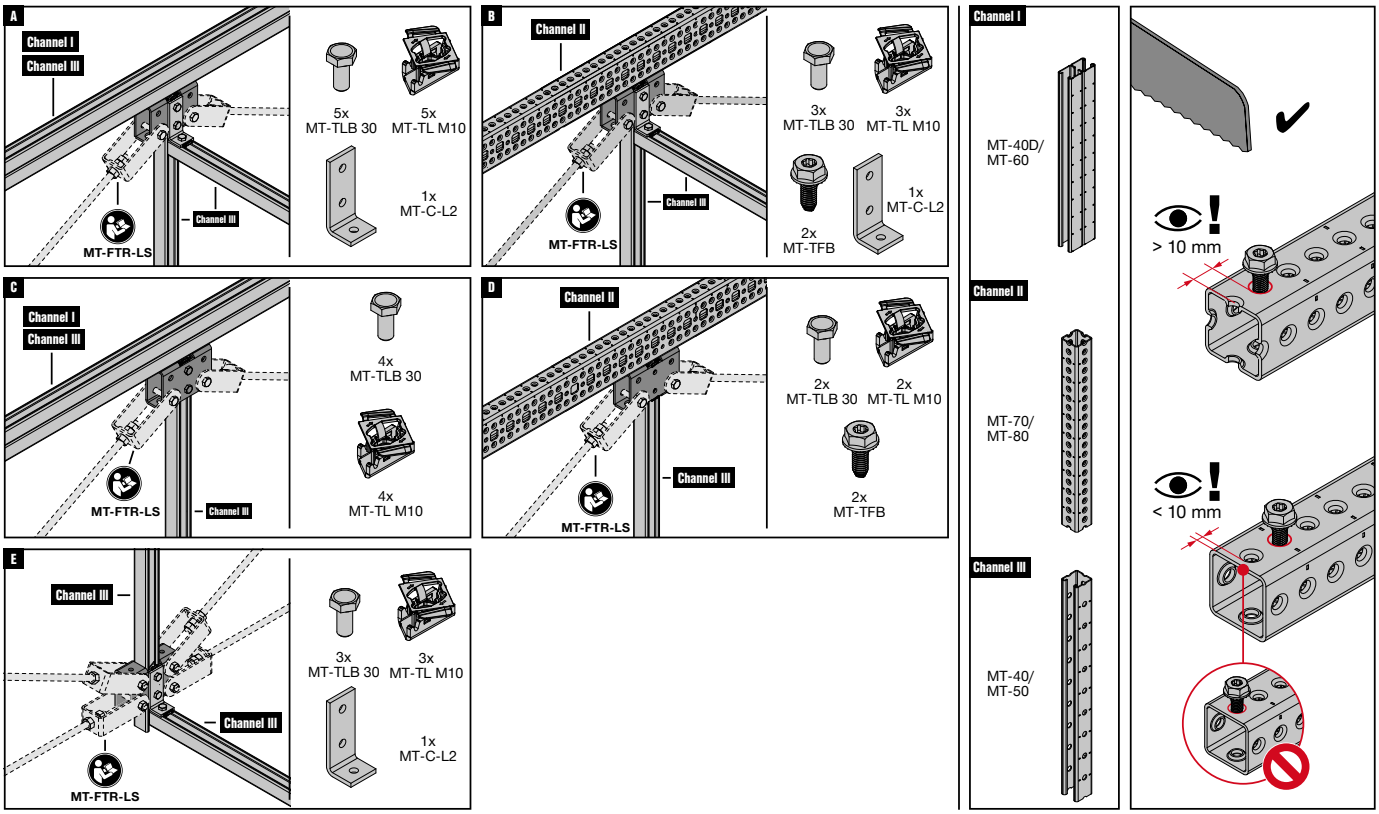

The latest IFU (Instruction For Use) is available on Hilti Online. Please check for any revisions before installing the product.

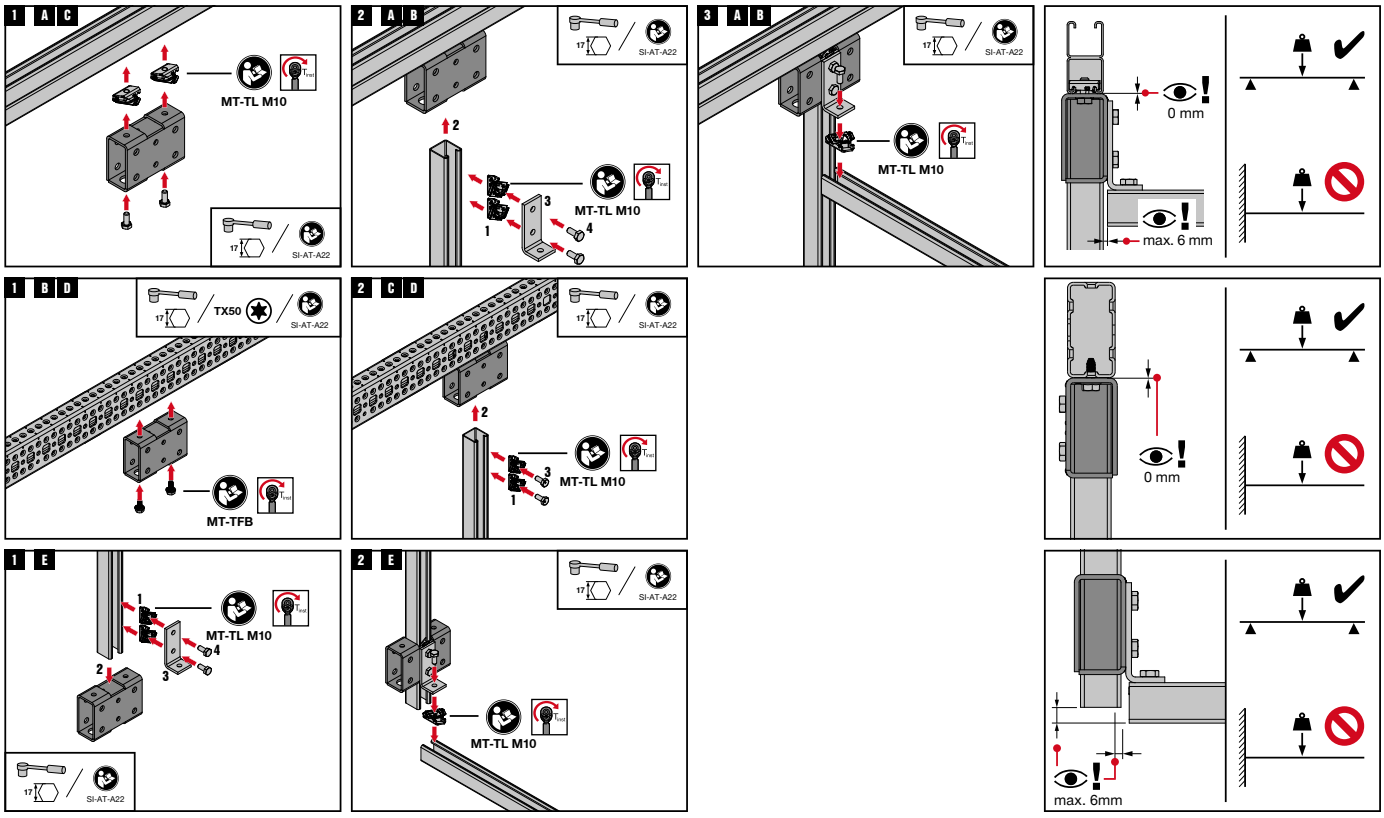

The latest IFU (Instruction For Use) is available on Hilti Online. Please check for any revisions before installing the product.

4

MT Open C-Channel Connectors
Long Span Bracing

Operation Instruction
MT-FTR-LS / MT-FTR-LS OC

2325259-04.2021

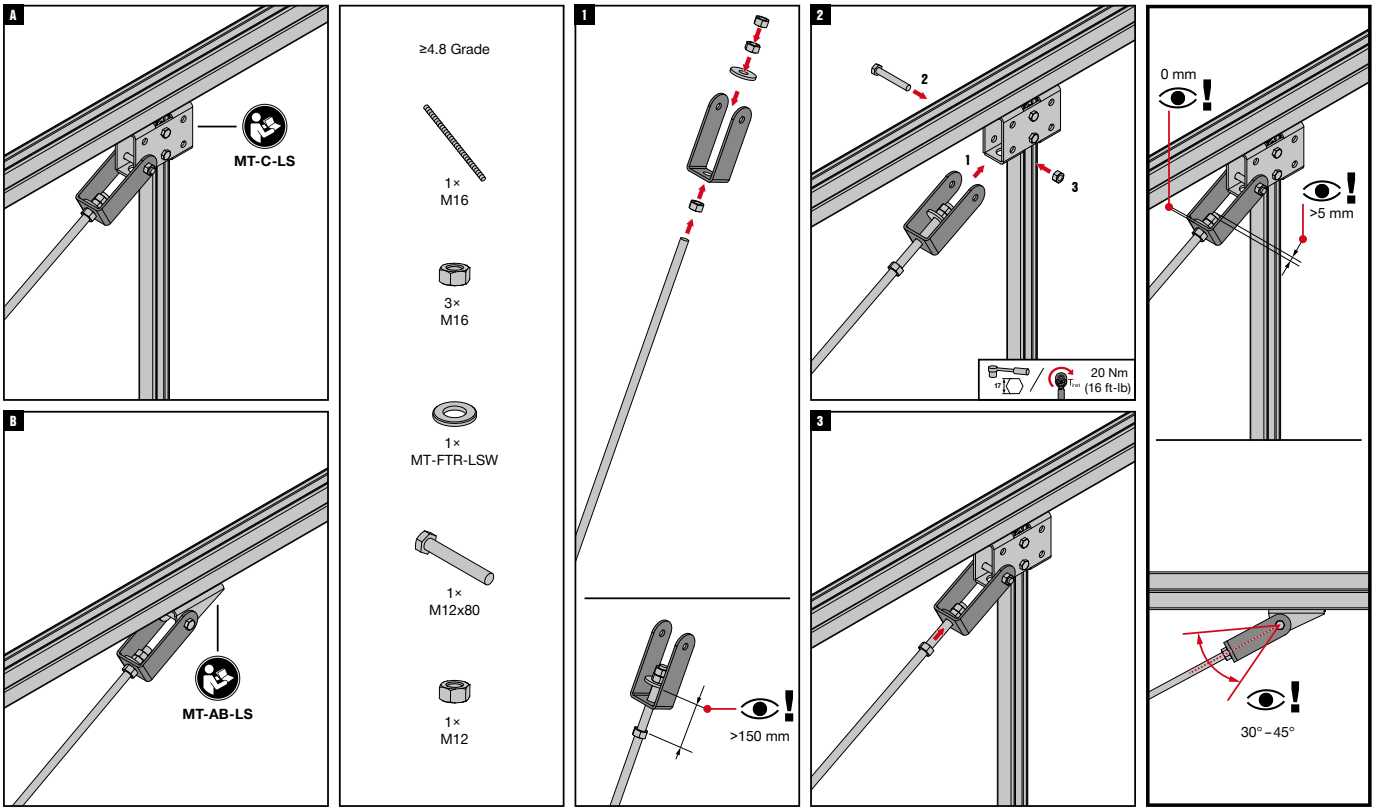

The latest IFU (Instruction For Use) is available on Hilti Online. Please check for any revisions before installing the product.

MT-AB-LS / MT-AB-LS OC

2325231-04.2021

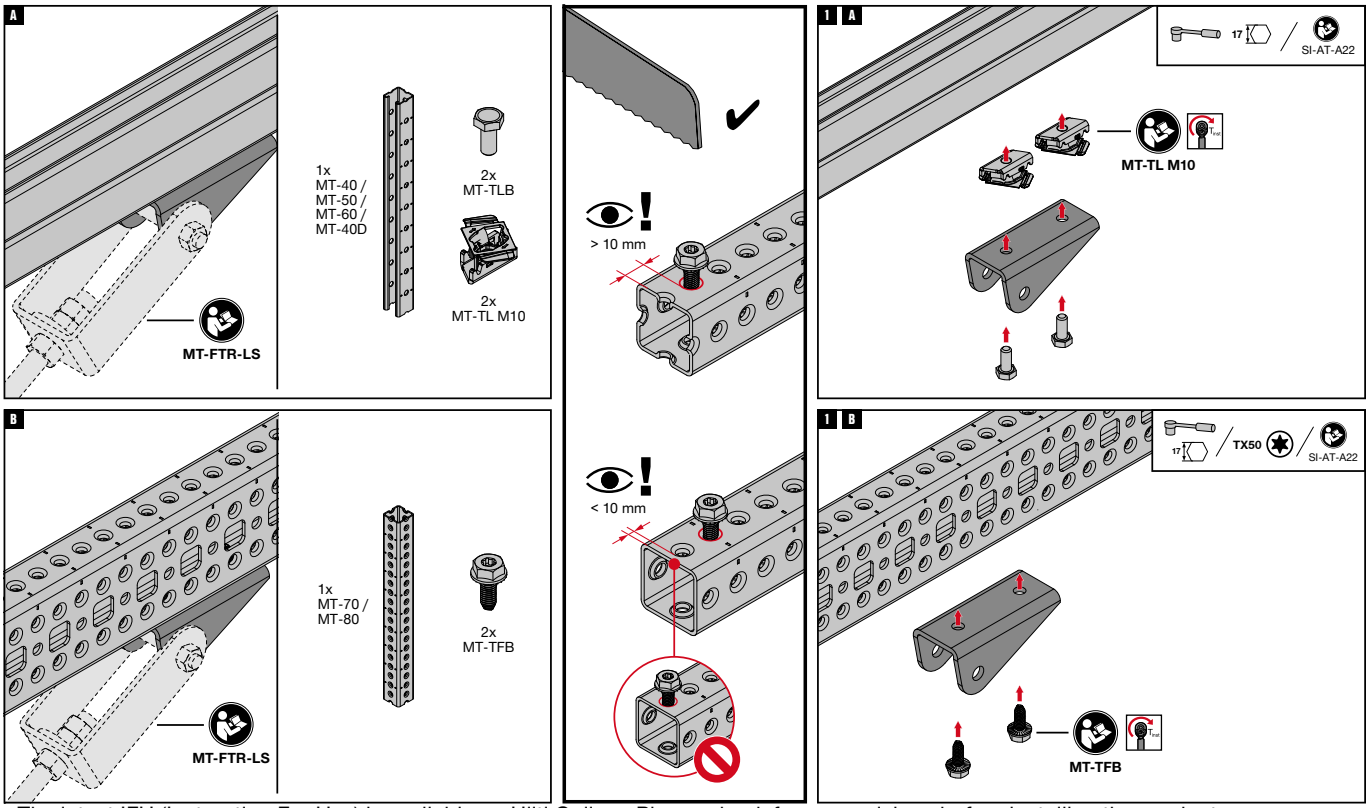

The latest IFU (Instruction For Use) is available on Hilti Online. Please check for any revisions before installing the product.

4

MT Open C-Channel Connectors
Channel Clamps

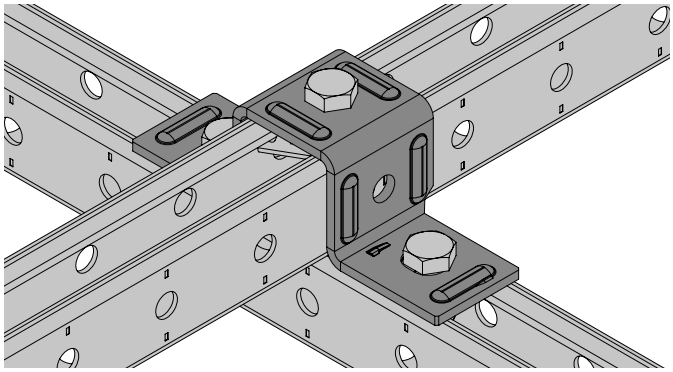

Applications

- Cross-connection of one C-Channel to another Channel or girder
- Suitable for use in dry, indoor environments

Advantages

- Compatible with MT Twist-Lock and MT Thread Forming Bolt Channel connectors – for much faster, adaptable assembly
- Universal – complete many different applications using few parts

Technical data

Material composition	Q235 or better steel
Surface finish	Indoor Coated - Electro galvanized

MT-CC-30 Channel Clamp

Order Designation	Technical data	Sales pack Quantity	Item number	
MT-CC-30	Dry indoor conditions (C1) Indoor with temporary condensation (C2)	10 pc	**2322427**	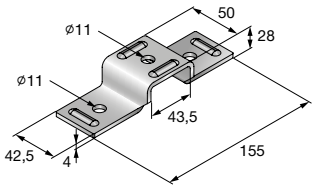

MT-CC-40/50 Channel Clamp

Order Designation	Technical data	Sales pack Quantity	Item number	
MT-CC-40/50	Dry indoor conditions (C1) Indoor with temporary condensation (C2)	20 pc	**2322429**	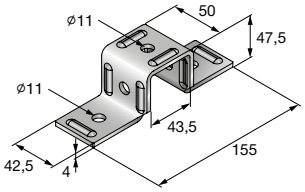

4

MT Open C-Channel Connectors
Channel Clamps

MT-CC-40/50X2 Channel Clamp

Order Designation	Technical data	Sales pack Quantity	Item number	
MT-CC-40/50X2	Dry indoor conditions (C1) Indoor with temporary condensation (C2)	10 pc	**2322392**	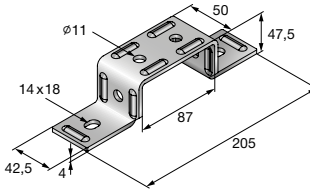

MT-CC-60 Channel Clamp

Order Designation	Technical data	Sales pack Quantity	Item number	
MT-CC-60	Dry indoor conditions (C1) Indoor with temporary condensation (C2)	15 pc	**2322396**	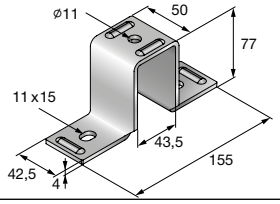

MT-CC-40D Channel clamp

Order Designation	Technical data	Sales pack Quantity	Item number	
MT-CC-40D	Dry indoor conditions (C1) Indoor with temporary condensation (C2)	10 pc	**2322398**	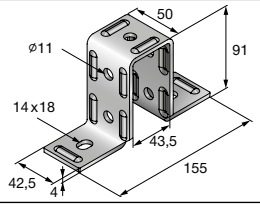

MT Open C-Channel Connectors
Channel Clamps - Outdoor

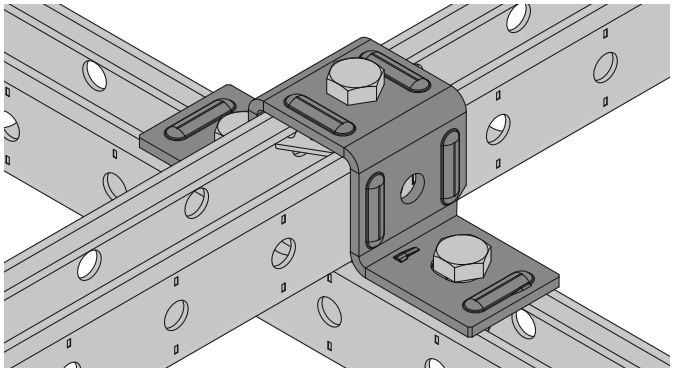

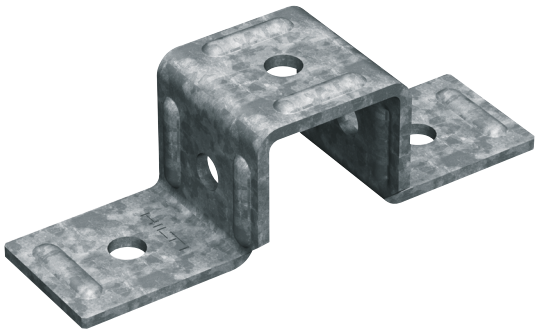

Applications

- Attaching polypanels to a substructure of MT strut/girders
- Hot/cold aisle containment in data centers

Advantages

- Helps lower installation cost – this new solution uses fewer and simpler components than previous Hilti panel connectors, saving you upfront costs and time on-site
- Compatible with MT Thread Forming Bolt Channel connectors – for much faster, adaptable assembly with higher pull-out and shear resistance
- Corrosion resistance – hot-dip galvanized to help protect against moisture and chemical corrosion

Technical data

Material composition	Q235 or better steel
Surface finish	Outdoor Coated - HDG

MT-CC-40/50 OC Channel Clamp - Outdoor

Order Designation	Technical data	Sales pack Quantity	Item number	
MT-CC-40/50 OC	Outdoor, low to moderate pollution (C3 / C4 - low)	20 pc	**2322391**	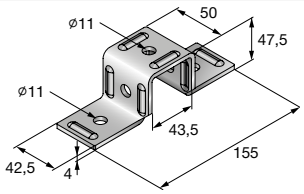

MT-CC-40/50X2 OC Channel Clamp - Outdoor

Order Designation	Technical data	Sales pack Quantity	Item number	
MT-CC-40/50X2 OC	Outdoor, low to moderate pollution (C3 / C4 - low)	10 pc	**2322393**	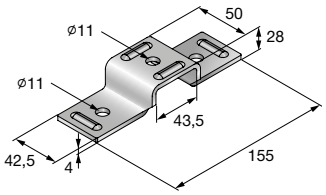

4

MT Open C-Channel Connectors
Channel Clamps - Outdoor

MT-CC-40D OC Channel Clamp - Outdoor

Order Designation	Technical data	Sales pack Quantity	Item number	
MT-CC-40D OC	Outdoor, low to moderate pollution (C3)	10 pc	**2322399**	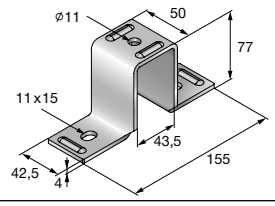

MT-CC-60 OC Channel Clamp - Outdoor

Order Designation	Technical data	Sales pack Quantity	Item number	
MT-CC-60 OC	Outdoor, low to moderate pollution (C3)	15 pc	**2322431**	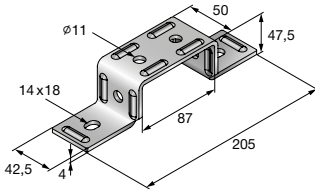

4

MT Open C-Channel Connectors
Channel Clamps

Technical data MT-Channel Clamps

Item image	Load drawing	Order Designation	+ Fz	- Fz	± Fx	± Fy
	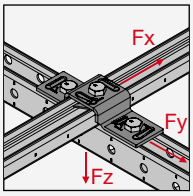	**MT-CC-30**	-	5,4 kN	2,5 kN	5,7 kN
	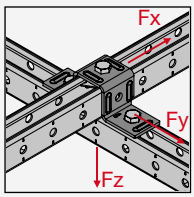	**MT-CC-40/50 / MT-CC-40/50 OC**	-	5,4 kN	2,5 kN	5,7 kN
	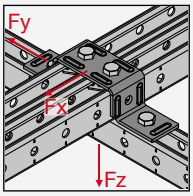	**MT-CC-40/50x2 / MT-CC-40/50x2 OC**	-	2,0 kN	2,5 kN	5,7 kN
	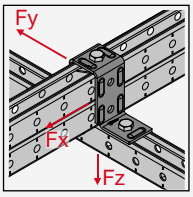	**MT-CC-40D / MT-CC-40D OC**	-	5,4 kN	2,5 kN	3,6 kN
	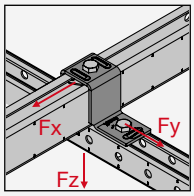	**MT-CC-60 / MT-CC-60 OC**	-	5,4 kN	2,5 kN	3,6 kN
	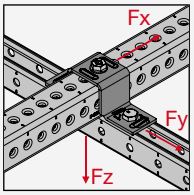	**MT-CC-70 OC**	-	5,4 kN	2,5 kN	3,6 kN

Design notes
- Shown load values are recommended values with partial safety factors for actions and resistance included
- Design value = 1.4 * recommended value
- The design resistance of the products is defined in accordance with EN1993

MT Open C-Channel Connectors

Channel Clamps

4

Operation Instruction

MT-CC-40/50 / MT-CC-40/50 OC

2324718-04.2021

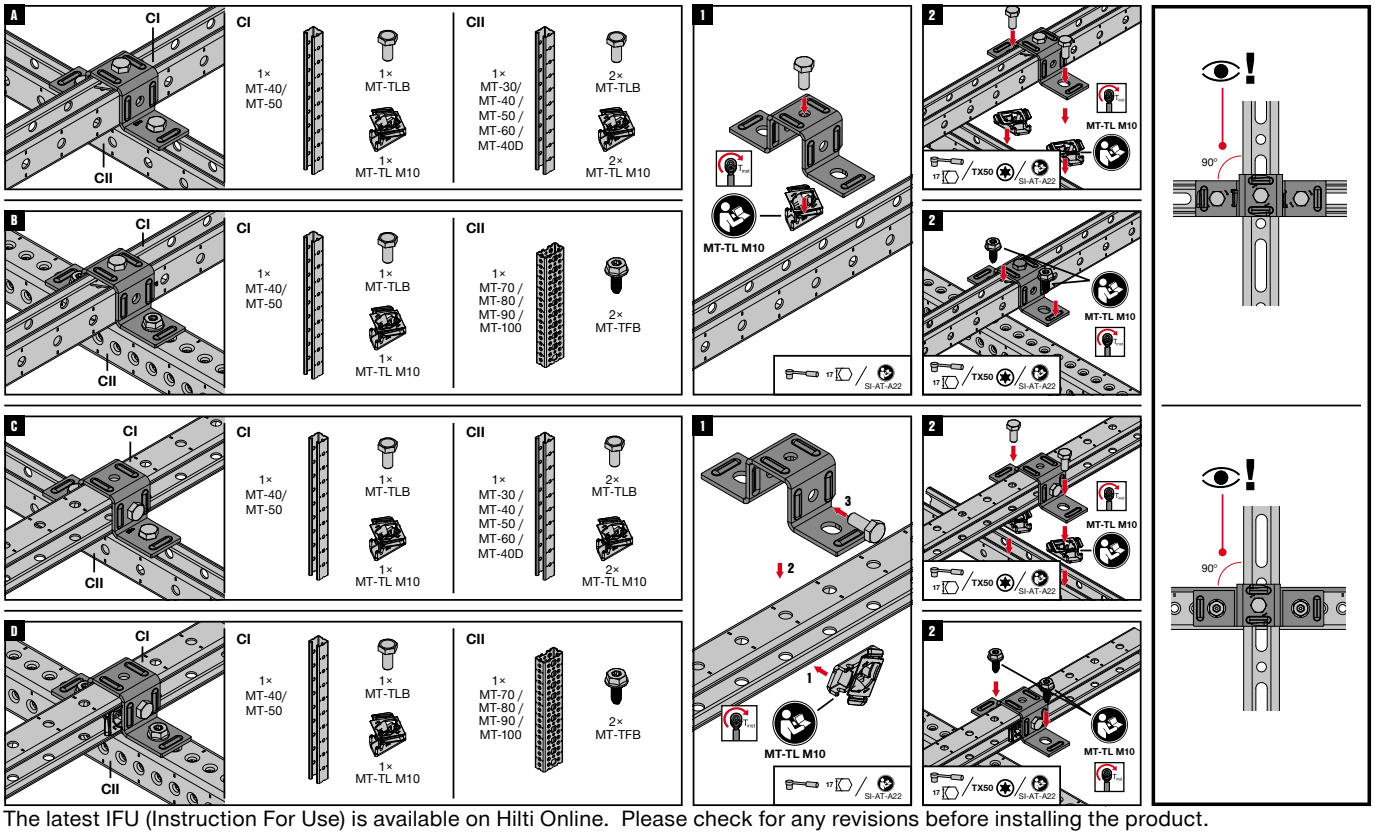

The latest IFU (Instruction For Use) is available on Hilti Online. Please check for any revisions before installing the product.

MT-CC-40/50×2 / MT-CC-40/50×2 OC

2324719-04.2021

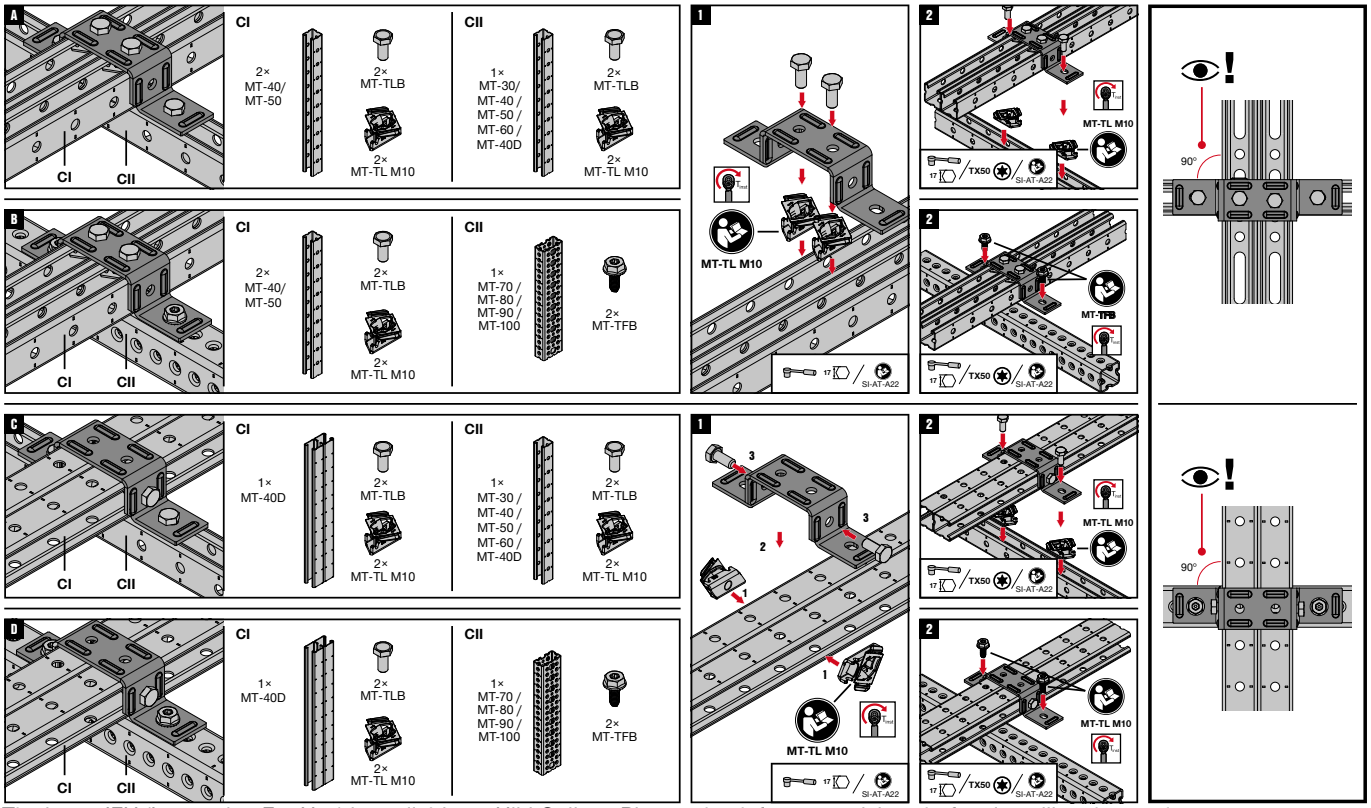

The latest IFU (Instruction For Use) is available on Hilti Online. Please check for any revisions before installing the product.

4

MT Open C-Channel Connectors
Channel Clamps

Operation Instruction
MT-CC-40D / MT-CC-40D OC

2324717-04.2021

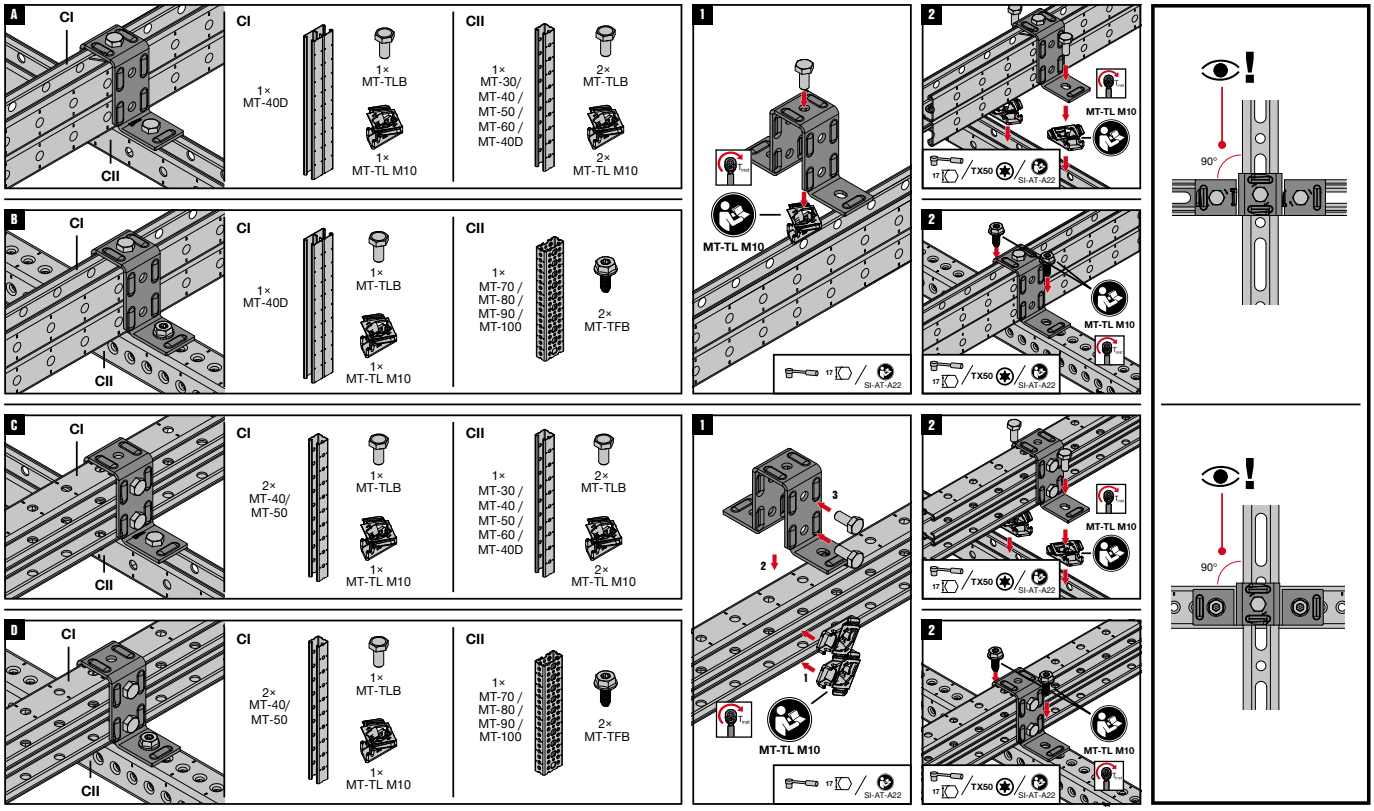

The latest IFU (Instruction For Use) is available on Hilti Online. Please check for any revisions before installing the product.

MT-CC-30 / MT-CC-40/50 / MT-CC-60 / MT-CC-30 OC / MT-CC-40/50 OC / MT-CC-60 OC

232516-04.2021

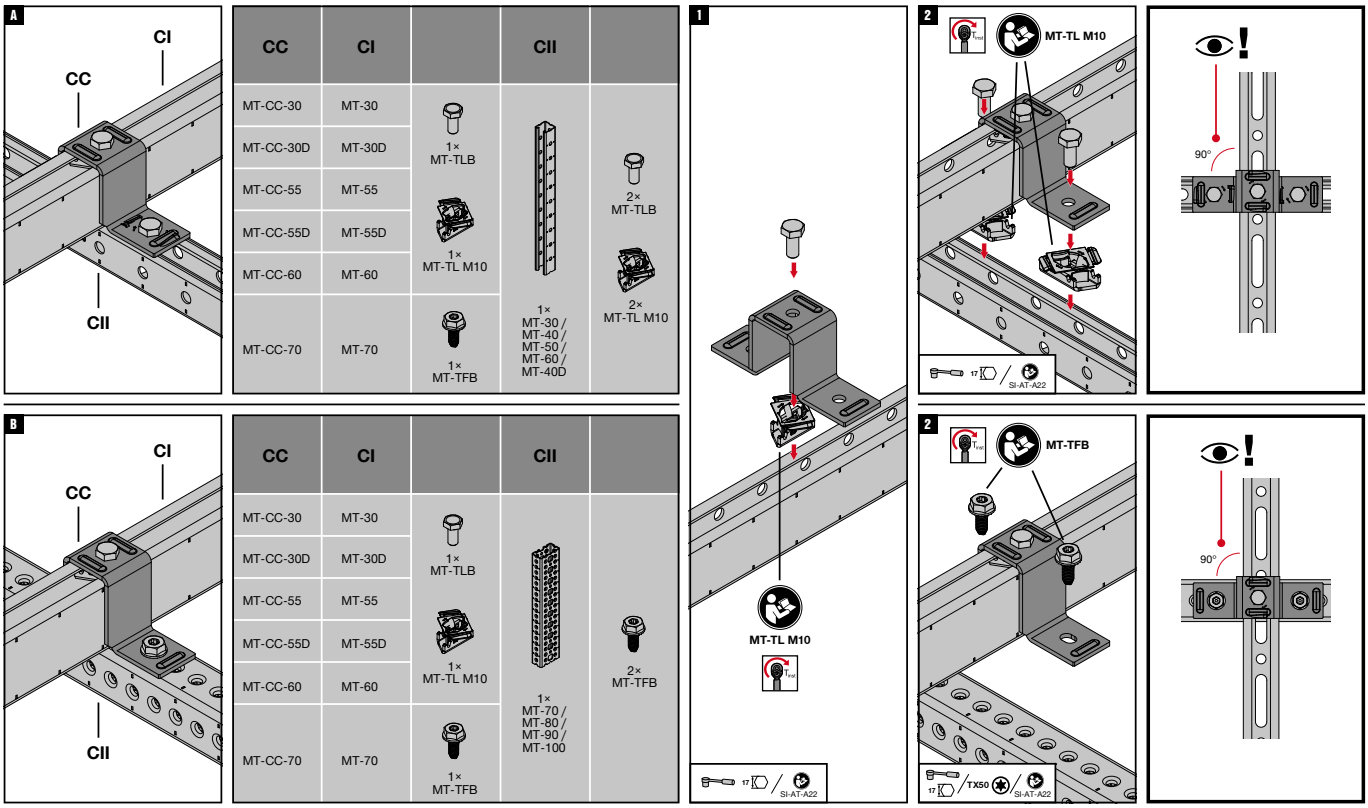

The latest IFU (Instruction For Use) is available on Hilti Online. Please check for any revisions before installing the product.

4

MT Open C-Channel Fast-Lock Connectors

Pre-assembled Fast-Lock nut and bolt for assembling light-duty C-Channel structures

Applications

- Right-angle connections between any MT C-Channels
- Assembling 2D metal framing for MEP support structures with light loads
- Suitable for use in dry, indoor environments

Technical data

Material composition	DD11 MOD
Surface finish	Indoor-coated Electro-galvanized

Advantages

- Faster installations – pre-assembled with the Hilti MT Fast-Lock, our fastest method for assembling a modular support system with fewer steps
- Simplified stock management – pre-assembly greatly reduces the total number of MT components, for easier purchasing, handling, and storage
- Consistent installation quality – pre-assembly removes additional steps, helping reduce assembly errors for safer installations
- Part of the Hilti MT system – an economical, all-in-one solution for virtually all modular MEP support structures
- Extensive software support - PROFIS Modular Support Engineering, BIMCAD content, and Revit® families are all available to streamline design and ordering

MT-C-LL1 FL Pre-assembled Channel Connector

Order Designation	Material composition	Technical data	Sales pack quantity	Item number	
MT-C-LL1 FL	Q235B	Dry indoor conditi-ons (C1) Indoor with temporary conden-sation (C2)	16 pc	**2399637**	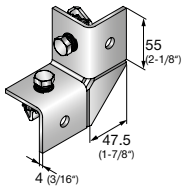

MT-C-Q1 FL Pre-assembled Channel Connector

Order Designation	Material composition	Technical data	Sales pack quantity	Item number	
MT-C-Q1 FL	DD11 MOD	Dry indoor condi-tions (C1) Indoor with temporary condensation (C2)	16 pc	**2399638**	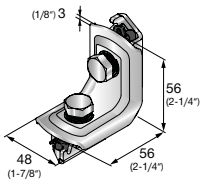

MT Open C-Channel Fast-Lock Connectors

MT-C-LL2 FL Pre-assembled Channel Connector

Order Designation	Material composition	Technical data	Sales pack quantity	Item number	
MT-C-LL2 FL	S235JR, Q235B	Dry indoor conditions (C1) Indoor with temporary condensation (C2)	16 pc	**2399661**	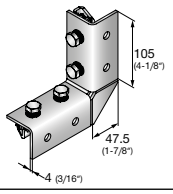

MT-C-L2E FL Pre-assembled Channel Connector

Order Designation	Material composition	Technical data	Sales pack quantity	Item number	
MT-C-L2E FL	S235JR	Dry indoor conditions (C1) Indoor with temporary condensation (C2)	12 pc	**2399666**	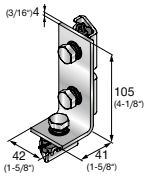

MT-CC-40/50 FL Pre-assembled Channel Clamp

Order Designation	Material composition	Technical data	Sales pack quantity	Item number	
MT-CC-40/50 FL	Q235B	Dry indoor conditions (C1) Indoor with temporary condensation (C2)	12 pc	**2399667**	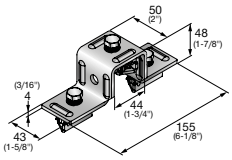

MT-C-T/2 FL Pre-assembled Channel Connector

Order Designation	Material composition	Technical data	Sales pack quantity	Item number	
MT-C-T/2 FL	S235JR, Q235B	Dry indoor conditions (C1) Indoor with temporary condensation (C2)	12 pc	**2399668**	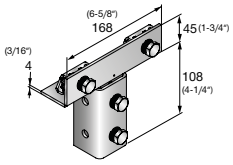

MT-ES-40 FL Pre-assembled Channel Connector

Order Designation	Material composition	Technical data	Sales pack quantity	Item number	
MT-ES-40 FL	S235JR, Q235B	Dry indoor conditions (C1) Indoor with temporary condensation (C2)	14 pc	**2399669**	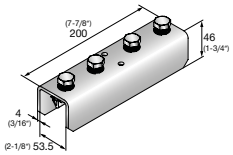

MT Fast-Lock seismic hinges

One-hole hinged Connector with pre-assembled Fast-Lock nut and bolt for assembling seismic bracing of MT C-Channel framing

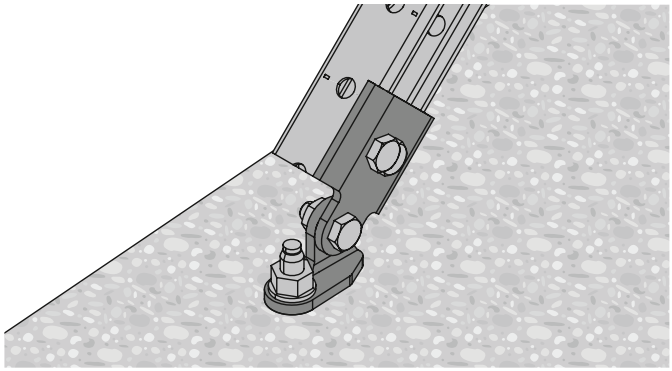

Applications

- Seismic bracing of C-Channel framing
- Anchoring C-Channel brace members to concrete for use as seismic bracing
- Connecting C-Channel brace members to MT-S-L seismic angle brackets for use as seismic bracing
- Suitable for use in dry, indoor environments

Technical data

Material composition	DD11 MOD
Surface finish	Indoor-coated Electro-galvanized

Advantages

- Faster installations – pre-assembled with the Hilti MT Fast-Lock, our fastest method for assembling a modular support system with fewer steps
- Simplified stock management – pre-assembly greatly reduces the total number of MT components, for easier purchasing, handling, and storage
- Consistent installation quality – pre-assembly removes additional steps, helping reduce assembly errors for safer installations
- Easy to install – pivoting joint simplifies assembly and fastening
- Part of the Hilti MT system – an economical, all-in-one solution for virtually all modular MEP support structures
- Extensive software support - PROFIS Modular Support Engineering, BIMCAD content, and Revit® families are all available to streamline design and ordering

MT-S-H1 FL Pre-assembled Seismic Hinge

Order Designation	Material composition	Technical data	Anchorage - D	Sales pack quantity	Item number	
MT-S-H1 FL M10	Q235B	Dry indoor conditions (C1) Indoor with temporary condensation (C2)	11,55 mm	14 pc	**2399662**	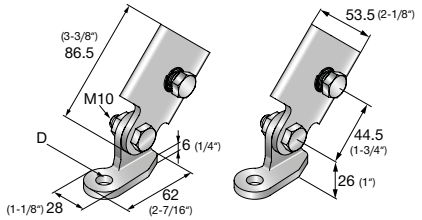
MT-S-H1 FL M12	Q235B	Dry indoor conditions (C1) Indoor with temporary condensation (C2)	13,65 mm	14 pc	**2399663**	

MT-S-L FL 40 seismic angle bracket

Angle bracket with pre-assembled Fast-Lock nut and bolt for assembling braced MT-40 C-Channel structures in seismic zones

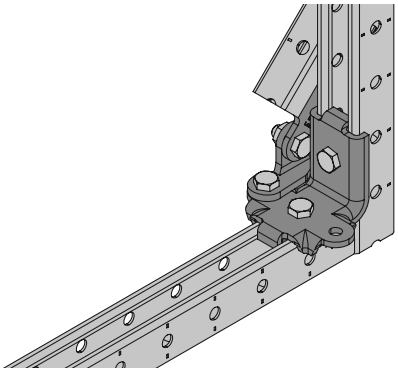

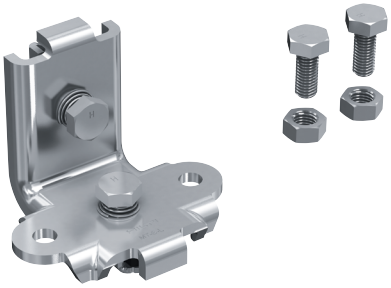

Applications

- Right-angle connections between MT-40 C-Channels with connection to seismic bracing
- Assembling metal framing for MEP support structures in seismic zones
- Suitable for use in dry, indoor environments

Technical data

Material composition	DD11 MOD
Surface finish	Indoor-coated Electro-galvanized

Advantages

- Faster installations – pre-assembled with the Hilti MT Fast-Lock, our fastest method for assembling a modular support system with fewer steps
- Simplified stock management – pre-assembly greatly reduces the total number of MT components, for easier purchasing, handling, and storage
- Consistent installation quality – pre-assembly removes additional steps, helping reduce assembly errors for safer installations
- Winged angle Connector – includes connection points to MT-S-H1
- Part of the Hilti MT system – an economical, all-in-one solution for virtually all modular MEP support structures
- Extensive software support - PROFIS Modular Support Engineering, BIMCAD content, and Revit® families are all available to streamline design and ordering

MT-S-L FL Pre-assembled Seismic Angle Bracket

Order Designation	Material composition	Technical data	Sales pack quantity	Item number	
MT-S-L FL seismic	S235JR, Q235B	Dry indoor conditi-ons (C1) Indoor with temporary conden-sation (C2)	14 pc	**2399664**	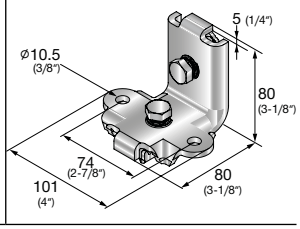

MT Open C-Channel Fast-Lock Connectors - Outdoor

Right-angle Connector with pre-assembled Fast-Lock nut and bolt for assembling C-Channel structures, for outdoor use with low pollution

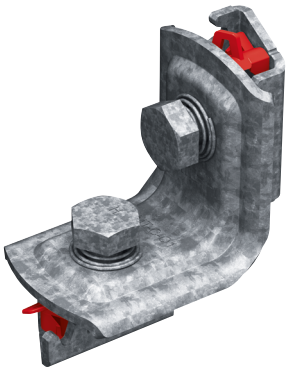

Applications

- Fastening L-shaped connections between any MT C-Channels
- Assembling 2D metal framing for MEP support structures, such as C-trapeze
- Suitable for use in moderately corrosive environments

Technical data

Material composition	Q235B
Surface finish	Hot Dip Galvanized

Advantages

- Faster installations – pre-assembled with the Hilti MT Fast-Lock, our fastest method for assembling a modular support system with fewer steps
- Simplified stock management – pre-assembly greatly reduces the total number of MT components, for easier purchasing, handling, and storage
- Consistent installation quality – pre-assembly removes additional steps, helping reduce assembly errors for safer installations
- Part of the Hilti MT system – an economical, all-in-one solution for virtually all modular MEP support structures
- Corrosion resistance – hot-dip galvanized to help protect against moisture and chemical corrosion

MT-C-LL1 FL OC Pre-assembled Channel Connector - Outdoor

Order Designation	Material composition	Technical data	Sales pack quantity	Item number	
MT-C-LL1 FL OC	Q235B	Outdoor, low to moderate pollution (C3 / C4 - low)	16 pc	**2399672**	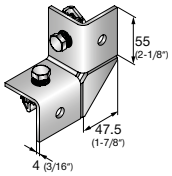

MT-C-Q1 FL OC Pre-assembled Channel Connector - Outdoor

Order Designation	Material composition	Technical data	Sales pack quantity	Item number	
MT-C-Q1 FL OC	DD11 MOD	Outdoor, low to moderate pollution (C3 / C4 - low)	16 pc	**2399673**	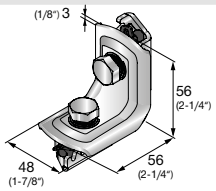

MT Open C-Channel Fast-Lock Connectors - Outdoors

MT-C-LL2 FL OC Pre-assembled Channel Connector - Outdoors

Order Designation	Material composition	Technical data	Sales pack quantity	Item number	
MT-C-LL2 FL OC	S235JR, Q235B	Outdoor, low to moderate pollution (C3 / C4 - low)	16 pc	**2399676**	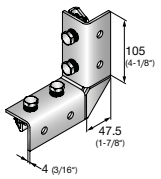

MT-C-L2E FL OC Pre-assembled Channel Connector- Outdoors

Order Designation	Material composition	Technical data	Sales pack quantity	Item number	
MT-C-L2E FL OC	S235JR	Outdoor, low to moderate pollution (C3 / C4 - low)	12 pc	**2399678**	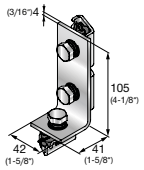

MT-CC-40/50 FL OC Pre-assembled Channel Clamp- Outdoors

Order Designation	Material composition	Technical data	Sales pack quantity	Item number	
MT-CC-40/50 FL OC	Q235B	Outdoor, low to moderate pollution (C3 / C4 - low)	12 pc	**2399679**	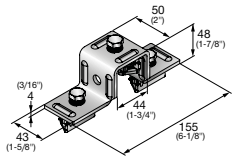

MT-C-T/2 FL OC Pre-assembled Channel Connector - Outdoors

Order Designation	Material composition	Technical data	Sales pack quantity	Item number	
MT-C-T/2 FL OC	S235JR, Q235B	Outdoor, low to moderate pollution (C3 / C4 - low)	12 pc	**2399680**	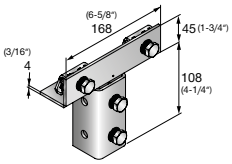

MT-ES-40 FL OC Pre-assembled Channel Connector - Outdoors

Order Designation	Material composition	Technical data	Sales pack quantity	Item number	
MT-ES-40 FL OC	S235JR, Q235B	Outdoor, low to moderate pollution (C3 / C4 - low)	14 pc	**2399681**	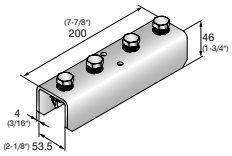

4

Technical data Fast-Lock Components

Item image	Load drawing	Order Designation	+ Fx	- Fx	+ Fy	- Fy	+ Fz	- Fz
	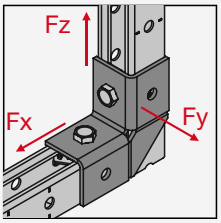	**MT-C-LL1 FL/ MT-C-LL1 FL OC**	5,76 kN	5,86 kN	0,89 kN	0,89 kN	5,86 kN	5,76 kN
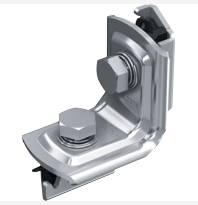	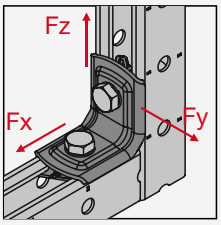	**MT-C-Q1 FL/ MT-C-Q1 FL OC**	5,60 kN	4,35 kN	0,40 kN	0,40 kN	5,60 kN	4,35 kN
	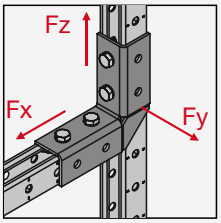	**MT-C-LL2 FL / MT-C-LL2 FL OC**	5,21 kN	8,81 kN	3,57 kN	0,89 kN	8,81 kN	5,21 kN
	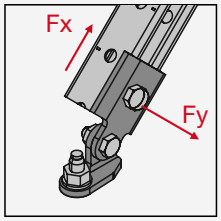	**MT-S-H1 FL M10**	5,00 kN	5,00 kN	-	-	-	-
	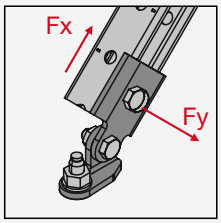	**MT-S-H1 FL M12**	5,00 kN	5,00 kN	-	-	-	-

Design notes
- Shown load values are recommended values with partial safety factors for actions and resistance included
- Design value = 1.4 * recommended value
- The design resistance of the products is defined in accordance with EN1993

Technical data Fast-Lock Connector

Item image	Load drawing	Order Designation	+ Fx	- Fx	+ Fy	- Fy	+ Fz	- Fz
	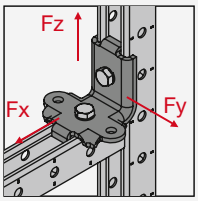	**MT-S-L-40 FL**	2,64 kN	3,43 kN	1,86 kN	1,86 kN	6,14 kN	5,93 kN
	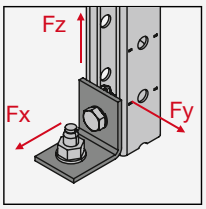	**MT-B-L FL / MT-B-L FL OC**	2,14 kN	5,00 kN	--	--	5,00 kN	2,14 kN
	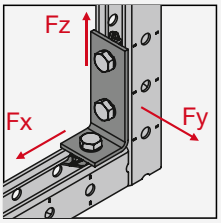	**MT-C-L2E FL / MT-C-L2E FL OC**	4,35 kN	7,20 kN	2,50 kN	2,50 kN	9,50 kN	5,70 kN
	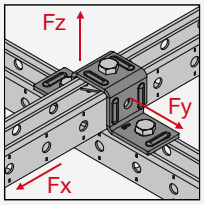	**MT-CC-40/50 FL / MT-CC-40/50 FL OC**	2,50 kN	2,50 kN	5,71 kN	5,71 kN	--	5,36 kN
	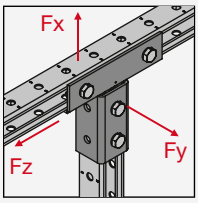	**MT-C-T/2 FL / MT-C-T/2 FL OC**	5,00 kN	6,38 kN	0,66 kN	0,66 kN	7,01 kN	7,01 kN
	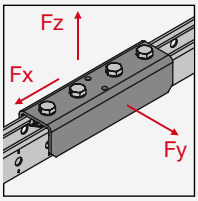	**MT-ES-40 FL / MT-ES-40 FL OC**	10,00 kN	10,00 kN	0,56 kN	0,56 kN	10,00 kN	10,00 kN

Design notes
- Shown load values are recommended values with partial safety factors for actions and resistance included
- Design value = 1.4 * recommended value
- The design resistance of the products is defined in accordance with EN1993

MT Fast-Lock Components

Operation Instruction
MT-S-L FL

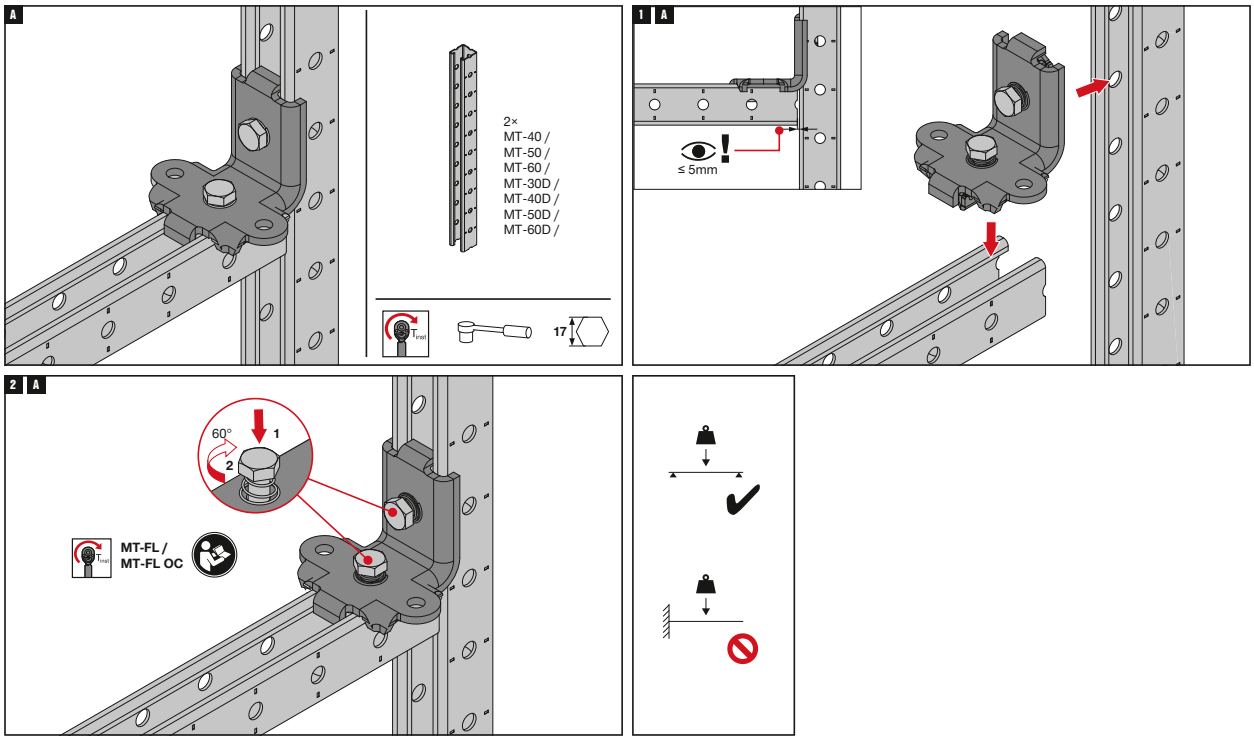

The latest IFU (Instruction For Use) is available on Hilti Online. Please check for any revisions before installing the product.

Operation Instruction
MT-ES-40 FL / MT-ES-40 FL OC

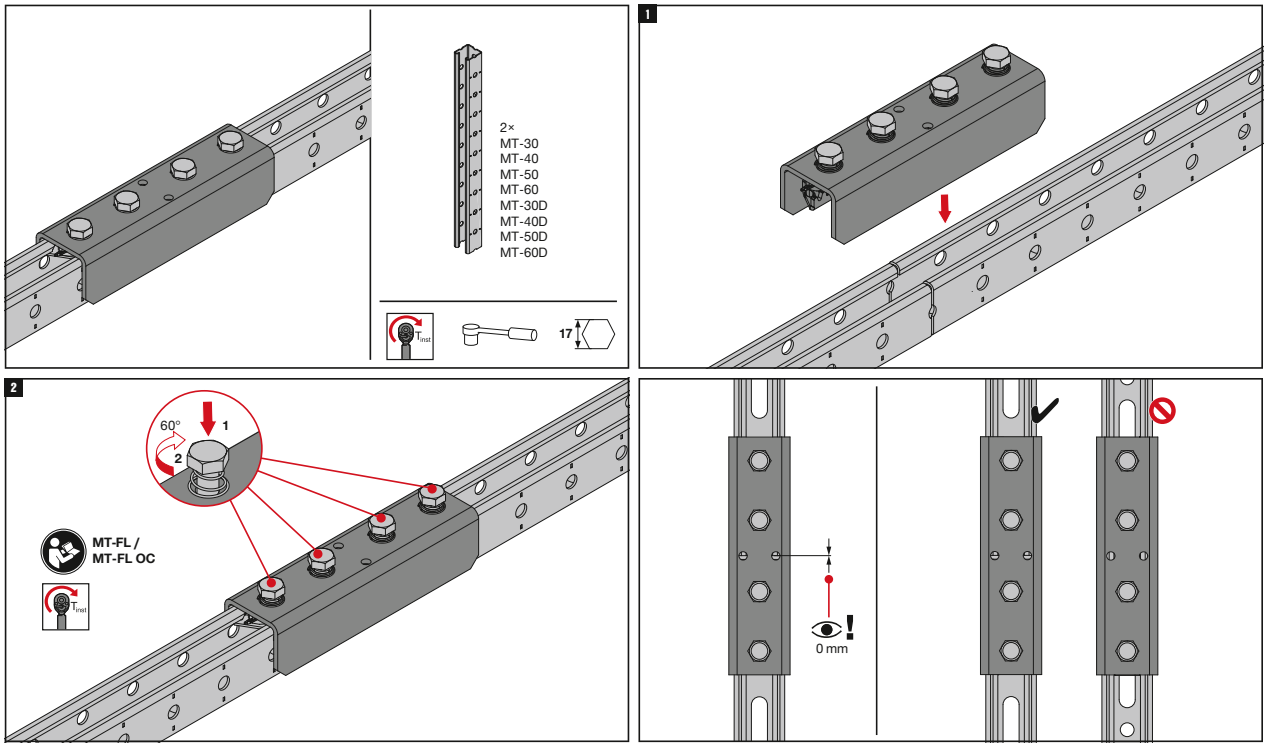

The latest IFU (Instruction For Use) is available on Hilti Online. Please check for any revisions before installing the product.

4

Operation Instruction
MT-S-H1 FL M10 / M12

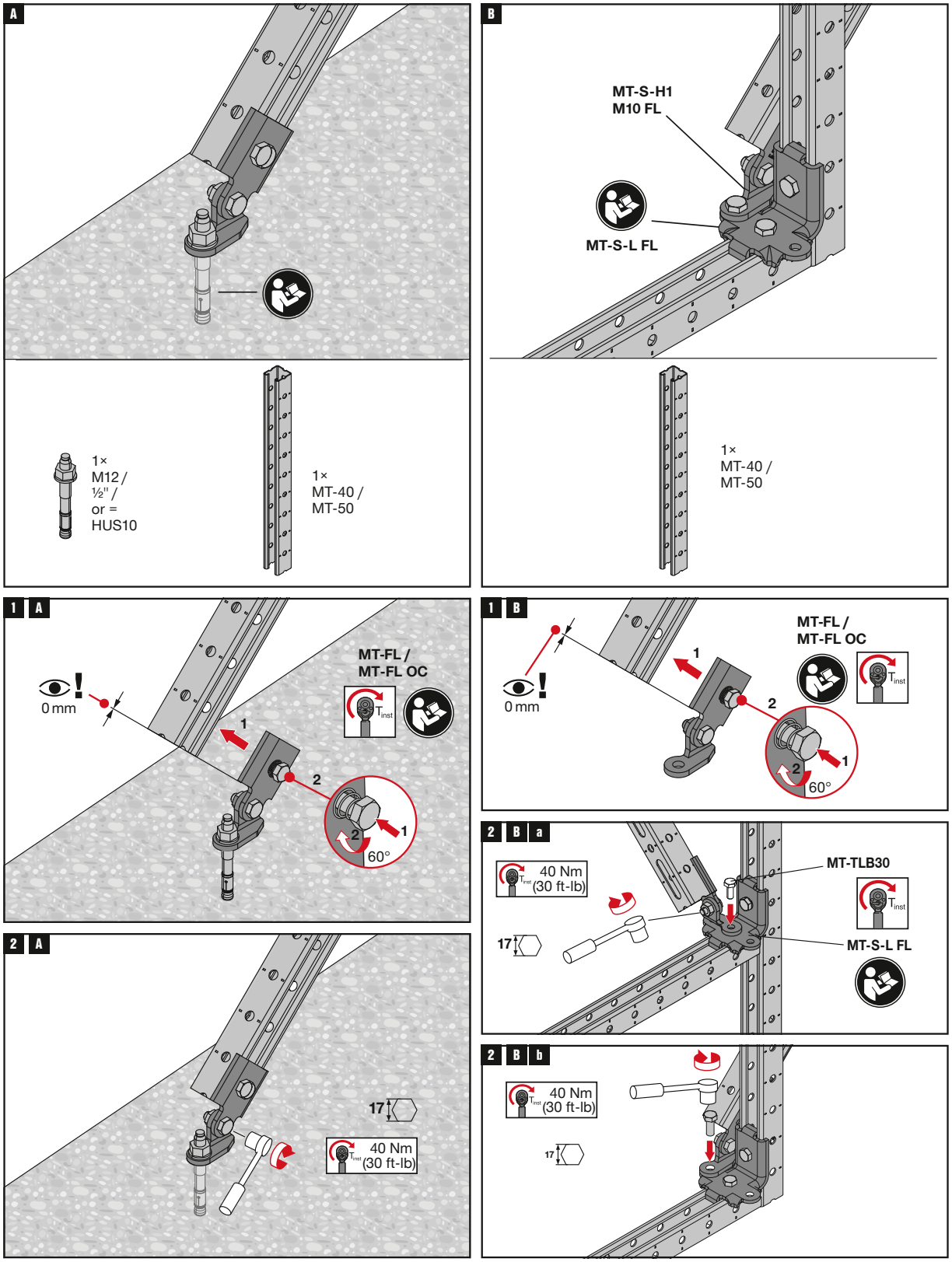

The latest IFU (Instruction For Use) is available on Hilti Online. Please check for any revisions before installing the product.

MT Fast-Lock Components

4

Operation Instruction
MT-C-T/2 FL / MT-C-T/2 FL OC

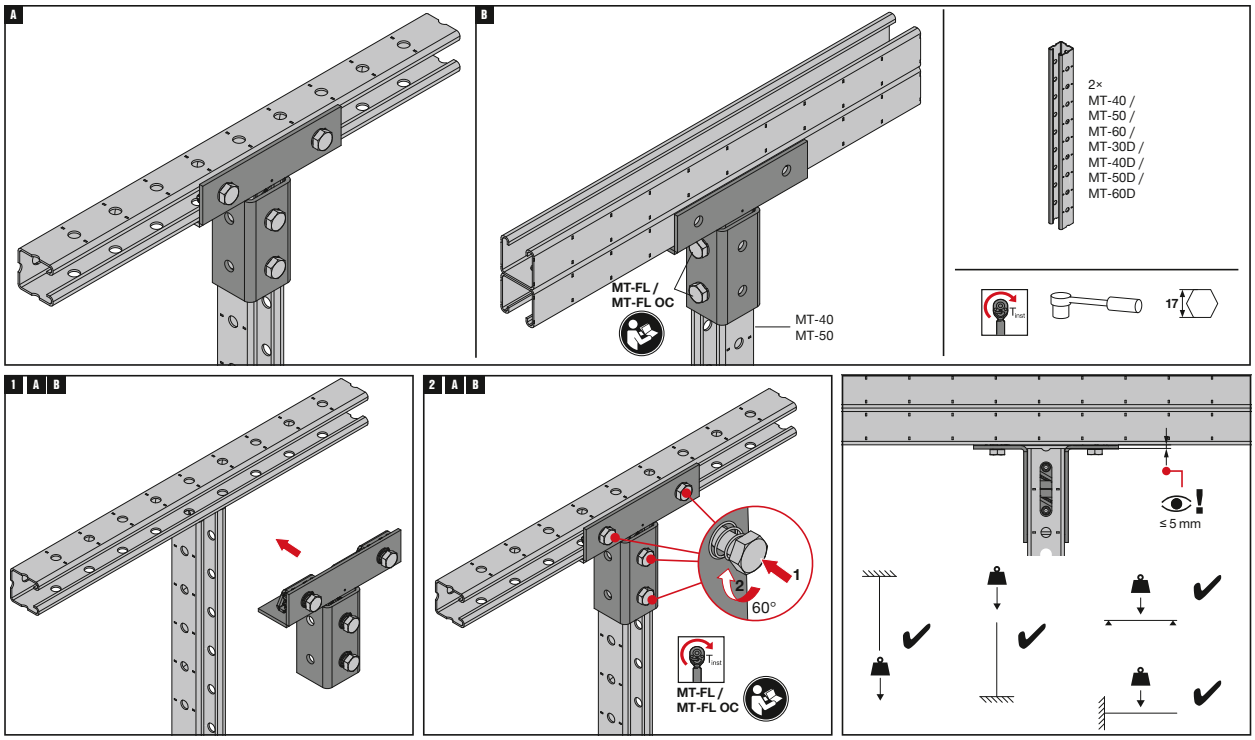

The latest IFU (Instruction For Use) is available on Hilti Online. Please check for any revisions before installing the product.

Operation Instruction
MT-C-Q1 FL / MT-C-Q1 FL OC

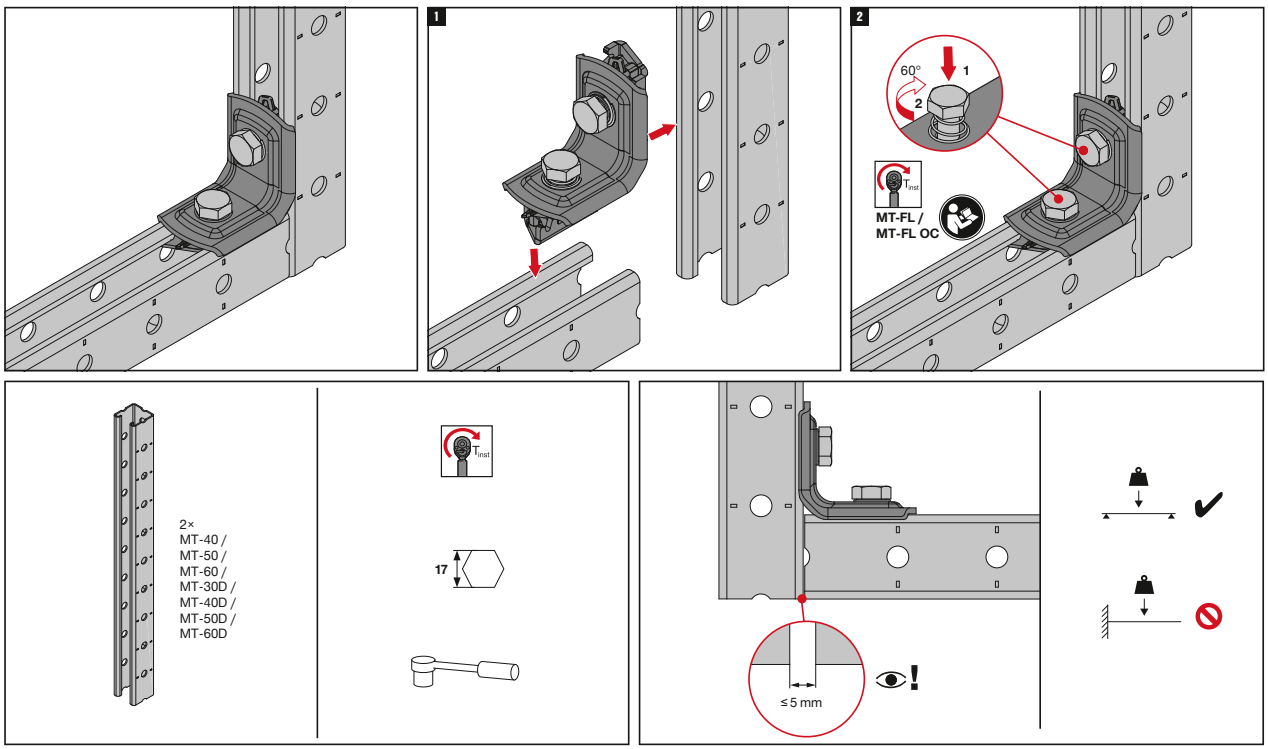

The latest IFU (Instruction For Use) is available on Hilti Online. Please check for any revisions before installing the product.

MT Fast-Lock Components

4

Operation Instruction

MT-C-LL1 FL / MT-C-LL1 FL OC

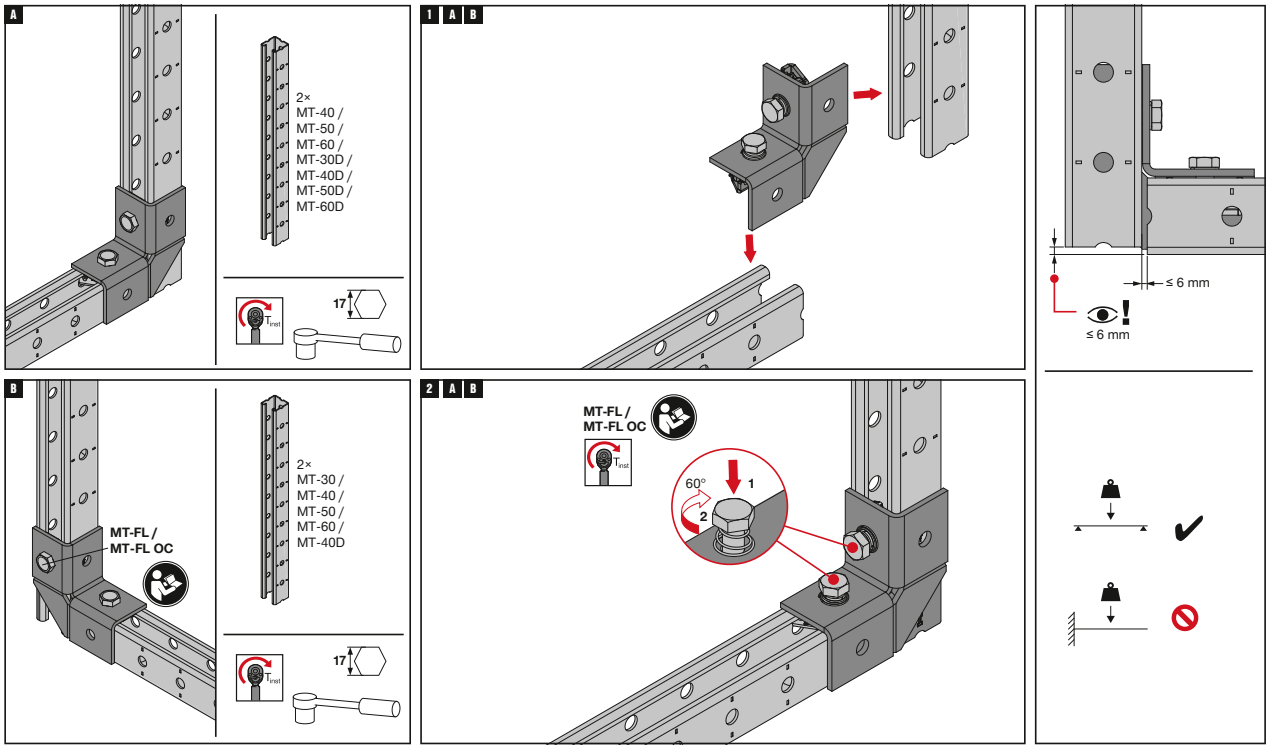

The latest IFU (Instruction For Use) is available on Hilti Online. Please check for any revisions before installing the product.

MT-C-LL2 FL / MT-C-LL2 FL OC

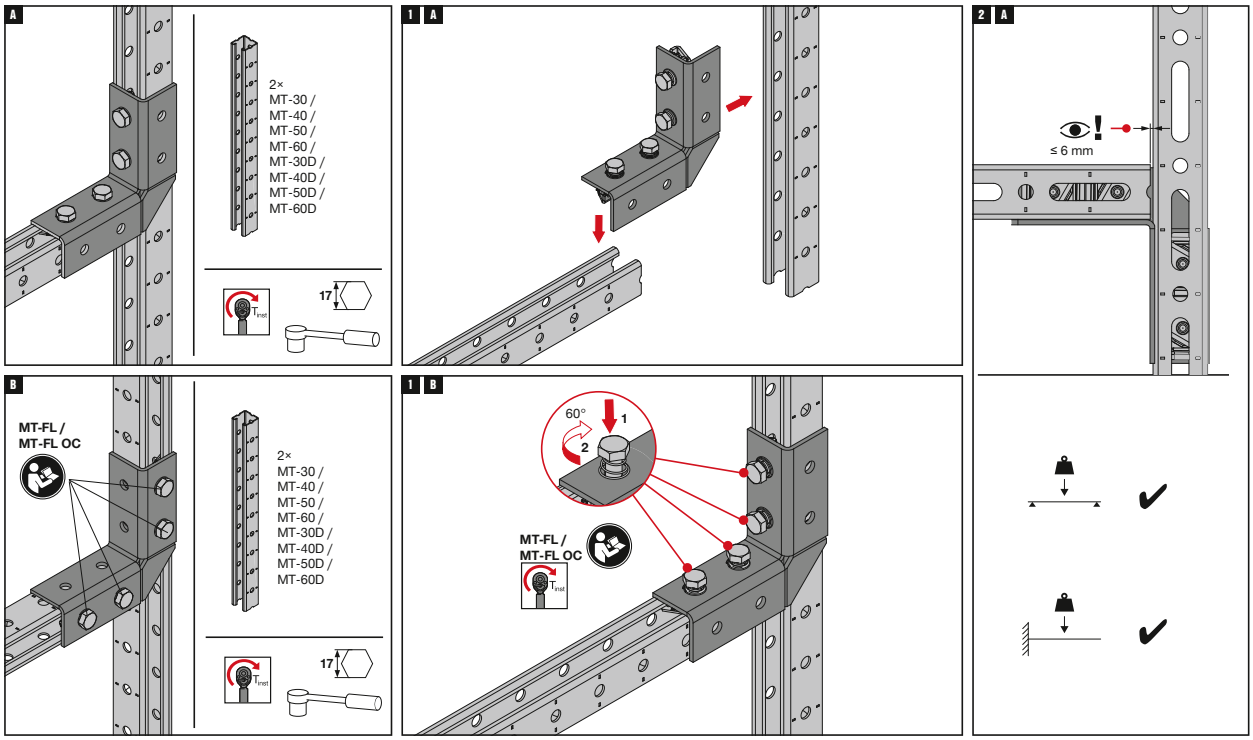

The latest IFU (Instruction For Use) is available on Hilti Online. Please check for any revisions before installing the product.

MT Fast-Lock Components

Operation Instruction
MT-C-L2E FL / MT-C-L2E FL OC

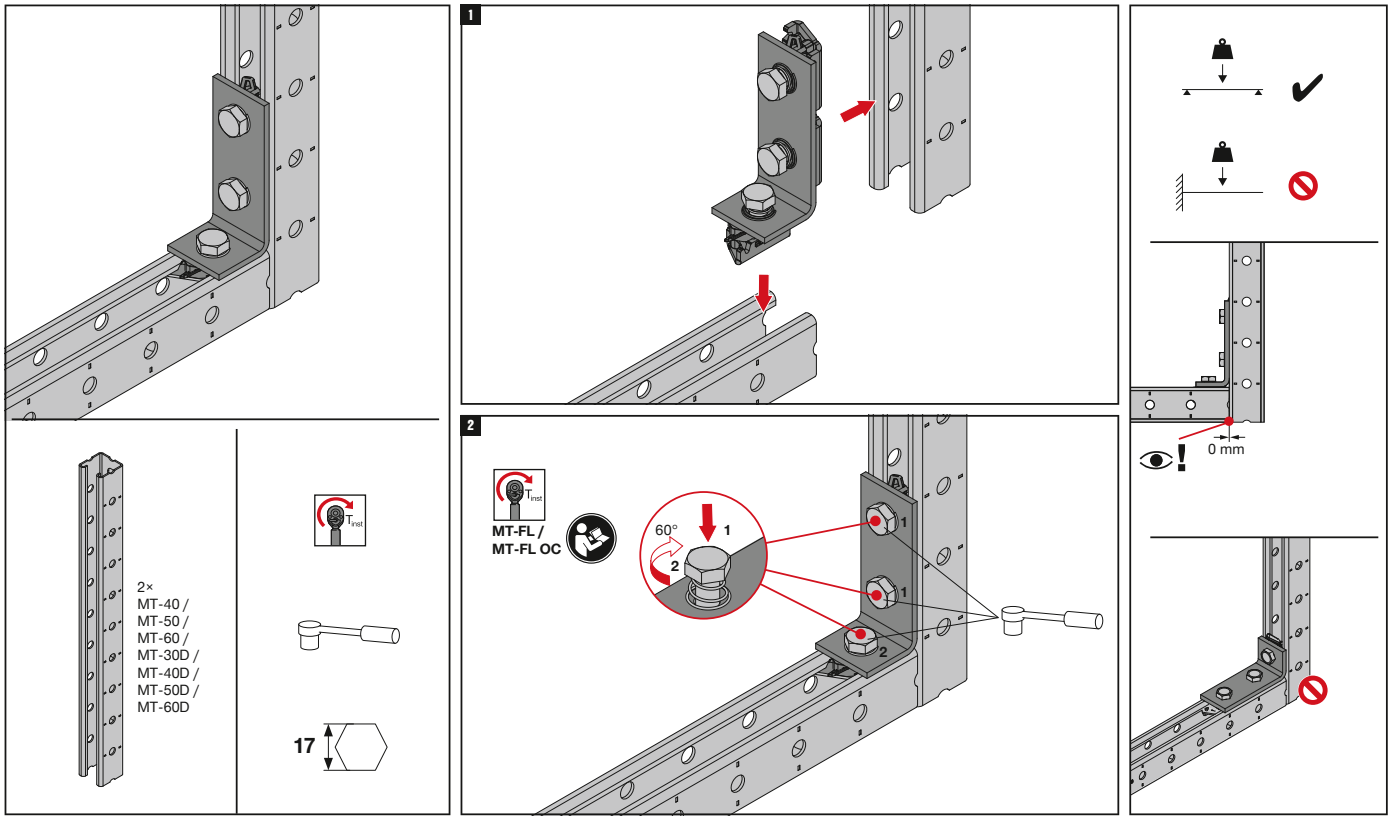

The latest IFU (Instruction For Use) is available on Hilti Online. Please check for any revisions before installing the product.

Operation Instruction
MT-CC-40/50 FL / MT-CC-40/50 FL OC

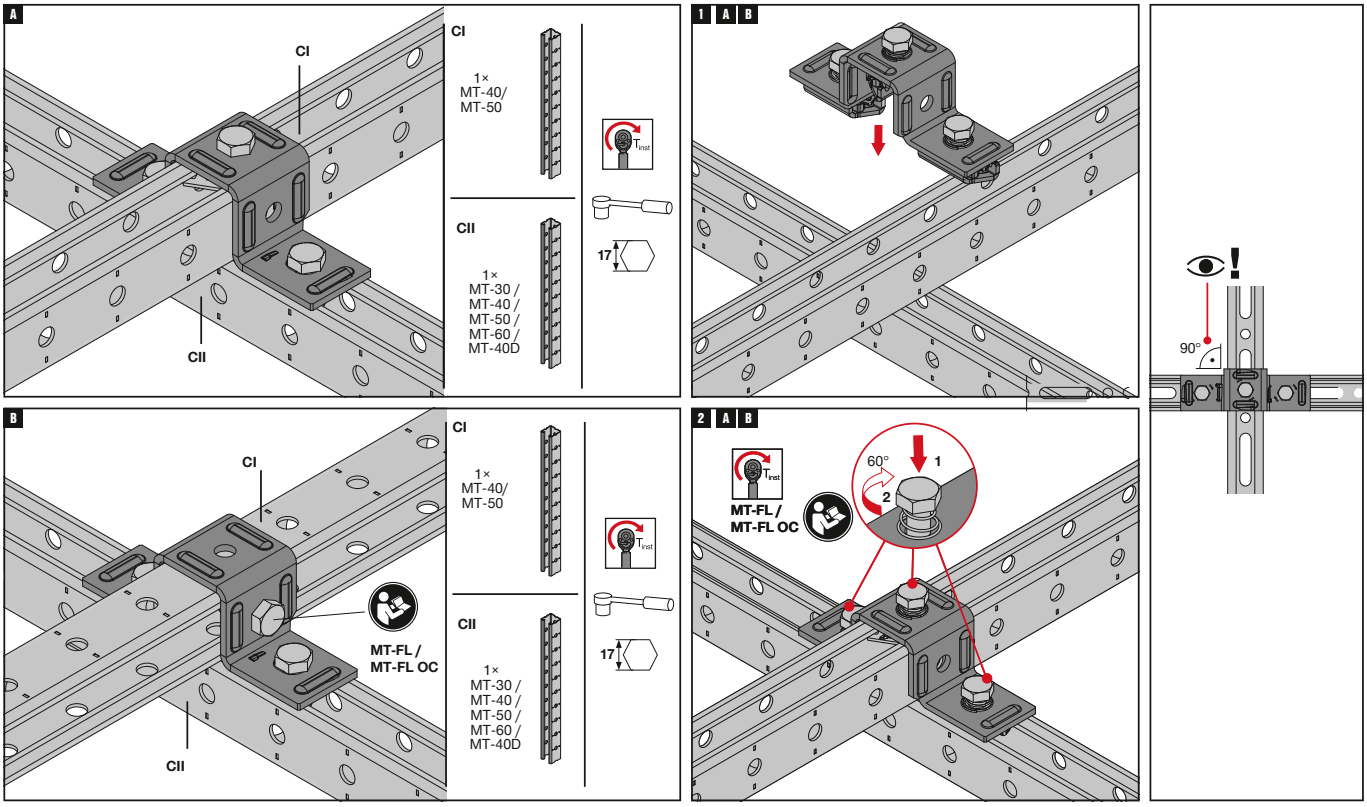

The latest IFU (Instruction For Use) is available on Hilti Online. Please check for any revisions before installing the product.

MT Fast-Lock Components

4

Operation Instruction
MT-B-T FL / MT-B-T FL OC

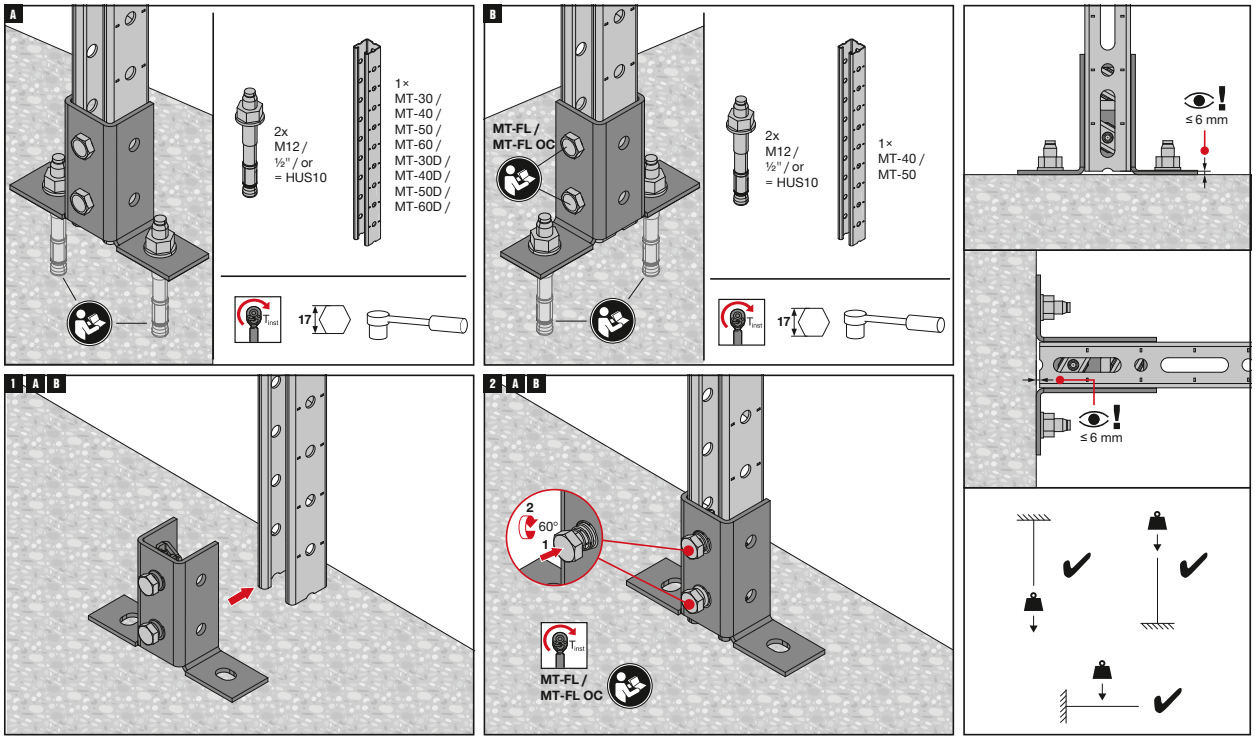

The latest IFU (Instruction For Use) is available on Hilti Online. Please check for any revisions before installing the product.

Operation Instruction
MT-B-O2 FL / MT-B-O2 FL OC

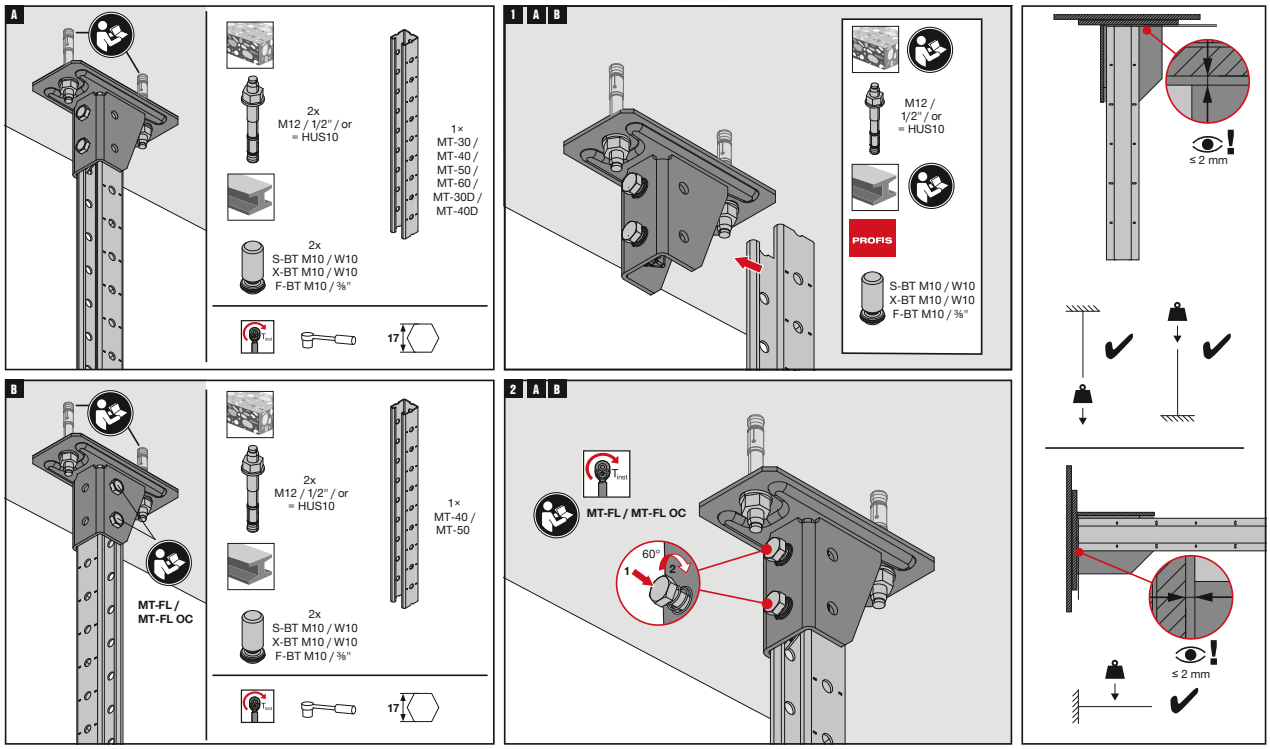

The latest IFU (Instruction For Use) is available on Hilti Online. Please check for any revisions before installing the product.

MT Box Profiles Connectors

90° Connectors - Outdoor

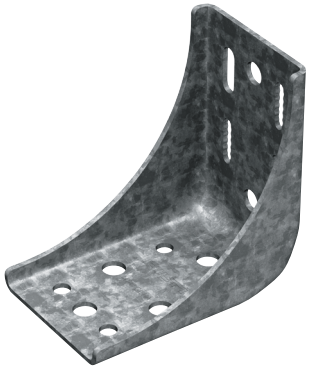

Applications

- Right-angle connections between any MT box profiles or profile Channels
- Assembling metal framing for MEP support structures when resistance to 3D stresses is required
- Fastening MT C-Channel to concrete floors, walls or ceilings

Technical data

Material composition	Q355 or better steel
Surface finish	Hot-dip galvanized - for outdoor use

Advantages

- Faster to install - with MT T-head bolts (MT-THB OC) or MT thread forming bolts (MT-TFB OC). Compatible with Hilti Adaptive Torque system, to help avoid over- or undertorquing of critical connecting elements (compatible tool and SI-AT module required)
- Versatile and secure connections - use vertical oblong holes to adjust height in 5mm (1/4“) increments and cloud holes with thread forming bolts (MT-TFB) for secure connections between MT box profiles
- Seamless adjustability - use the anchor holes in the middle of the angle connector for mounting to MT-90H profiles, allowing you to attach, adjust and re-adjust at any point along the profile‘s seamless groove
- Flexible - angle connectors can also be used as a baseplate, achored to concrete, or directly fastened to steel Combine one, two or four of them, for the best fit to your load requirements

MT-C-GS OC Angle Connector - Outdoor

Order Designation	Technical data	Sales pack Quantity	Item number	
MT-C-GS OC	Outdoor, low to moderate pollution (C3 / C4 - low)	10 pc	**2272064**	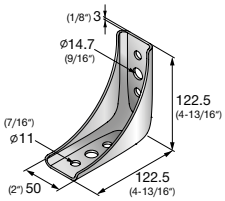

MT-C-GS A OC Angle Connector - Outdoor

Order Designation	Technical data	Sales pack Quantity	Item number	
MT-C-GS A OC	Outdoor, low to moderate pollution (C3 / C4 - low)	10 pc	**2272068**	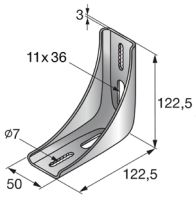

MT Box Profiles Connectors

90° Connectors - Outdoor

4

MT-C-GS HA OC Angle Connector - Outdoor

Order Designation	Technical data	Sales pack Quantity	Item number	
MT-C-GS HA OC	Outdoor, low to moderate pollution (C3 / C4 - low)	10 pc	**2430775**	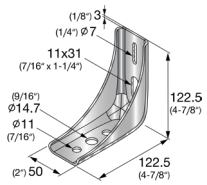

MT-C-GL OC Angle Connector - Outdoor

Order Designation	Technical data	Sales pack Quantity	Item number	
MT-C-GL OC	Outdoor, low to moderate pollution (C3 / C4 - low)	10 pc	**2272066**	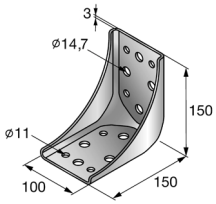

MT-C-GL A OC Angle Connector - Outdoor

Order Designation	Technical data	Sales pack Quantity	Item number	
MT-C-GL A OC	Outdoor, low to moderate pollution (C3 / C4 - low)	10 pc	**2272069**	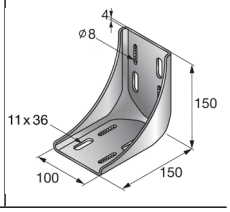

MT-C-GL HA OC Angle Connector - Outdoor

Order Designation	Technical data	Sales pack Quantity	Item number	
MT-C-GL HA OC	Outdoor, low to moderate pollution (C3 / C4 - low)	10 pc	**2430759**	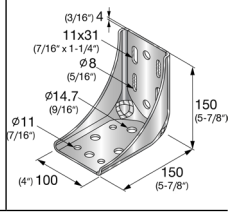

MT Box Profiles Connectors
90° Connectors - Outdoor

4

Technical data MT Angle Connectors - Outdoor

Item image	Load drawing	Order Designation	+ Fz	- Fz	± Fx	± Fy
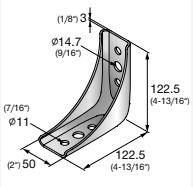	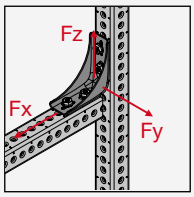	**MT-C-GS OC**	11,9 kN	7,6 kN	5,2 kN	2,6 kN
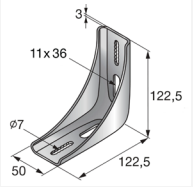	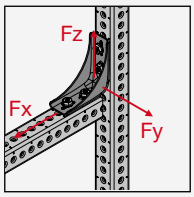	**MT-C-GS A OC**	11,9 kN	7,6 kN	5,2 kN	2,6 kN
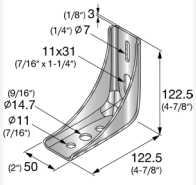	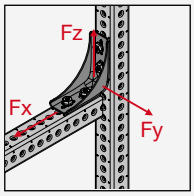	**MT-C-GS HA OC**	11,9 kN	7,6 kN	5,2 kN	2,6 kN

Design notes
- Shown load values are recommended values with partial safety factors for actions and resistance included
- Design value = 1.4 * recommended value
- The design resistance of the products is defined in accordance with EN1993

Technical data MT Angle Connectors - Outdoor

Item image	Load drawing	Order Designation	+ Fz	- Fz	± Fx	± Fy
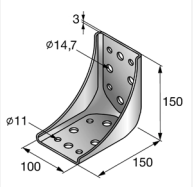	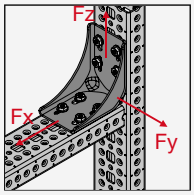	**MT-C-GL OC**	14,6 kN	13,5 kN	16,5 kN	11,7 kN
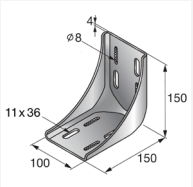	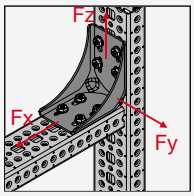	**MT-C-GL A OC**	14,6 kN	13,5 kN	16,5 kN	11,7 kN
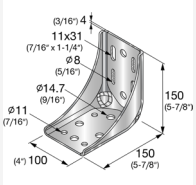	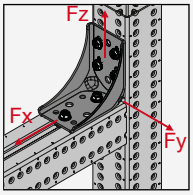	**MT-C-GL HA OC**	13,7 kN	4,9 kN	2,0 kN	3,0 kN

Design notes
- Shown load values are recommended values with partial safety factors for actions and resistance included
- Design value = 1.5 * recommended value
- The design resistance of the products is defined in accordance with EN1993

4

MT Box Profiles Connectors

90° Connectors - Outdoor

Operation Instruction

MT-C-GS OC

2290665-06.2020

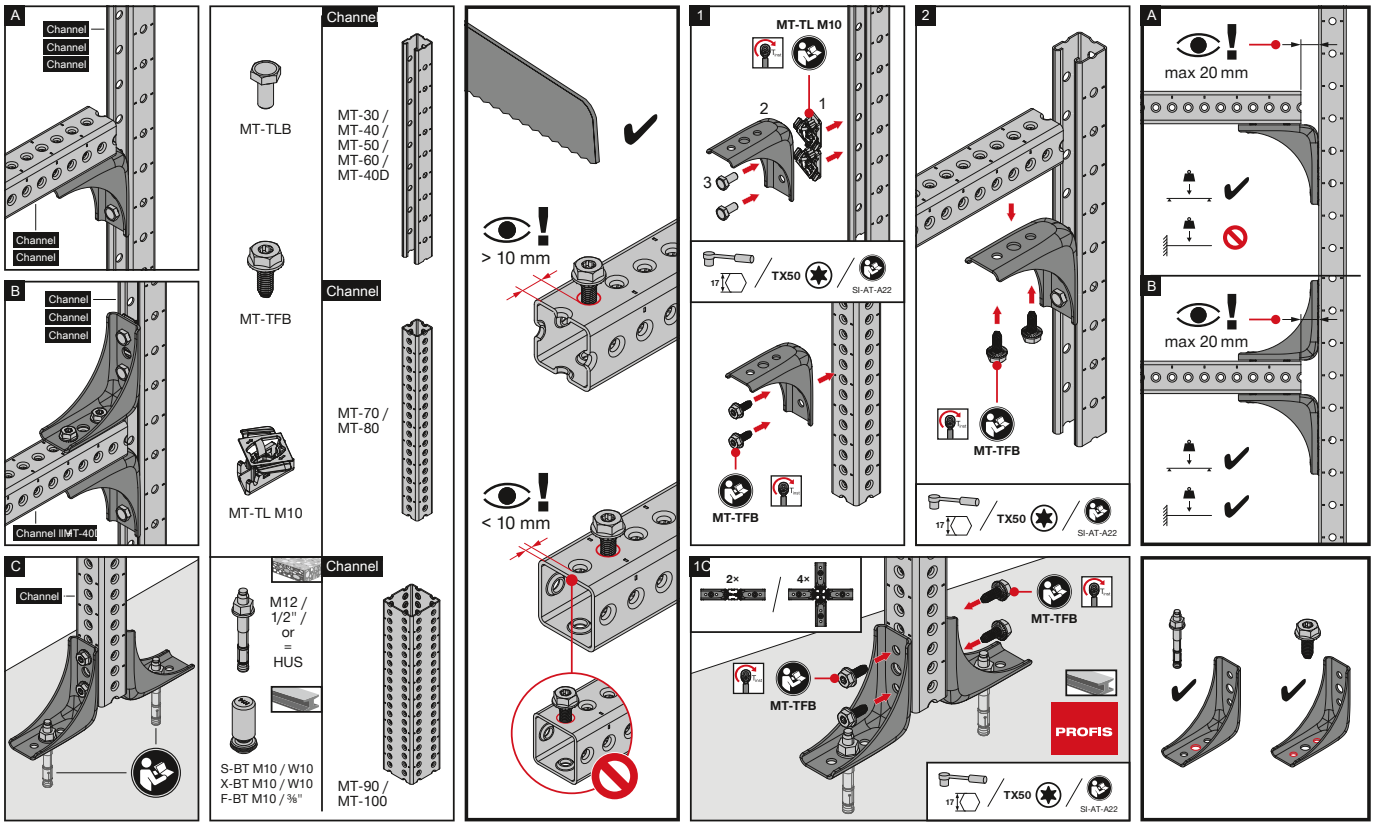

The latest IFU (Instruction For Use) is available on Hilti Online. Please check for any revisions before installing the product.

MT-C-GS A OC

2289567-09.2020

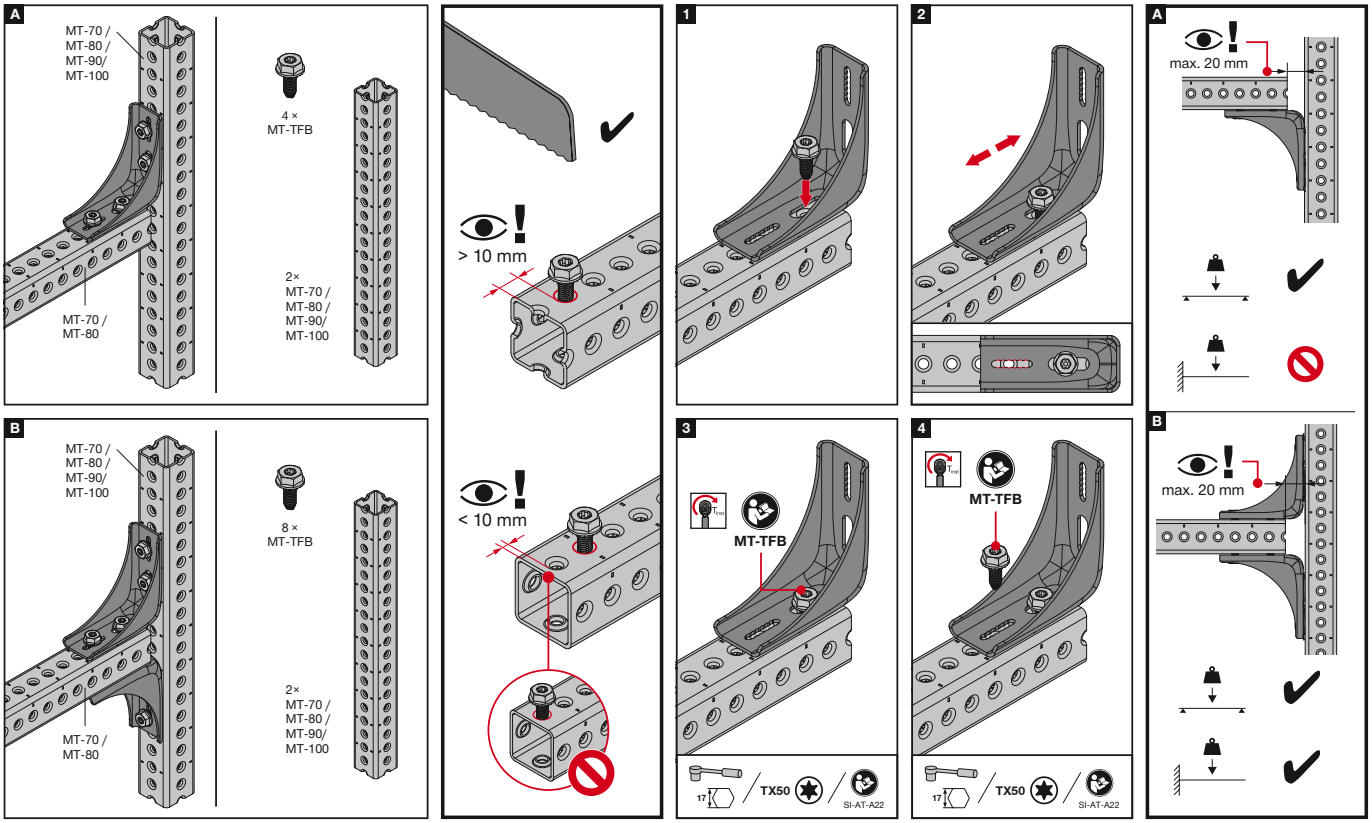

The latest IFU (Instruction For Use) is available on Hilti Online. Please check for any revisions before installing the product.

4

MT Box Profiles Connectors
90° Connectors - Outdoor

Operation Instruction
MT-C-GL OC

2289566-07.2020

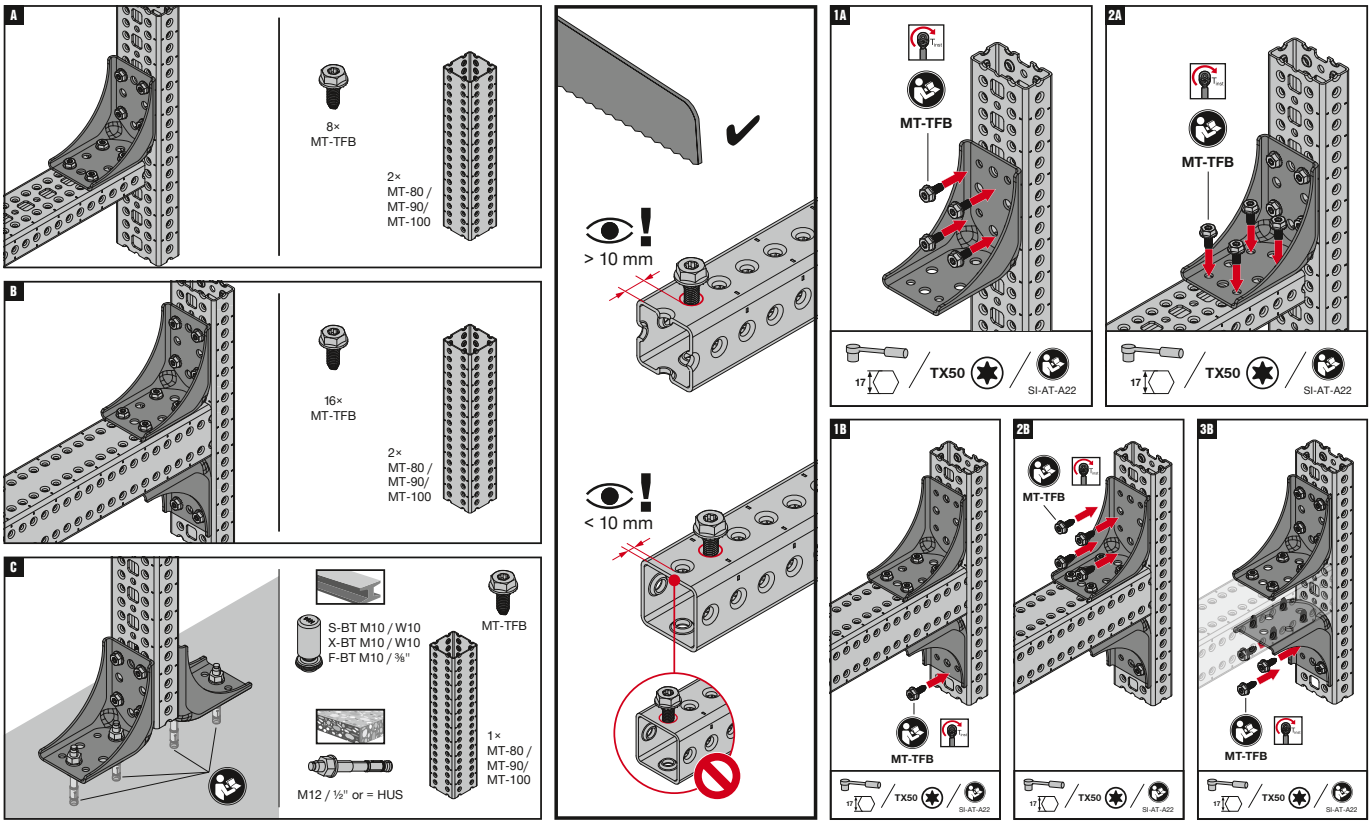

The latest IFU (Instruction For Use) is available on Hilti Online. Please check for any revisions before installing the product.

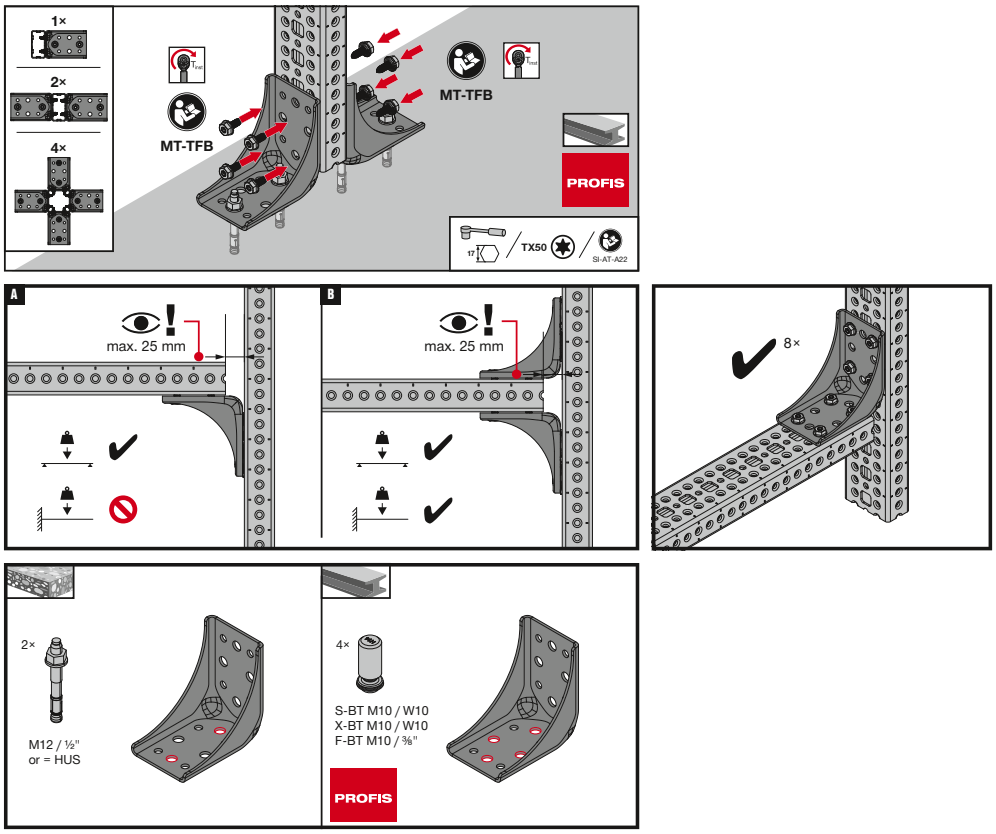

The latest IFU (Instruction For Use) is available on Hilti Online. Please check for any revisions before installing the product.

4

MT Box Profiles Connectors

90° Connectors - Outdoor

Operation Instruction

MT-C-GL A OC

2289568-09.2020

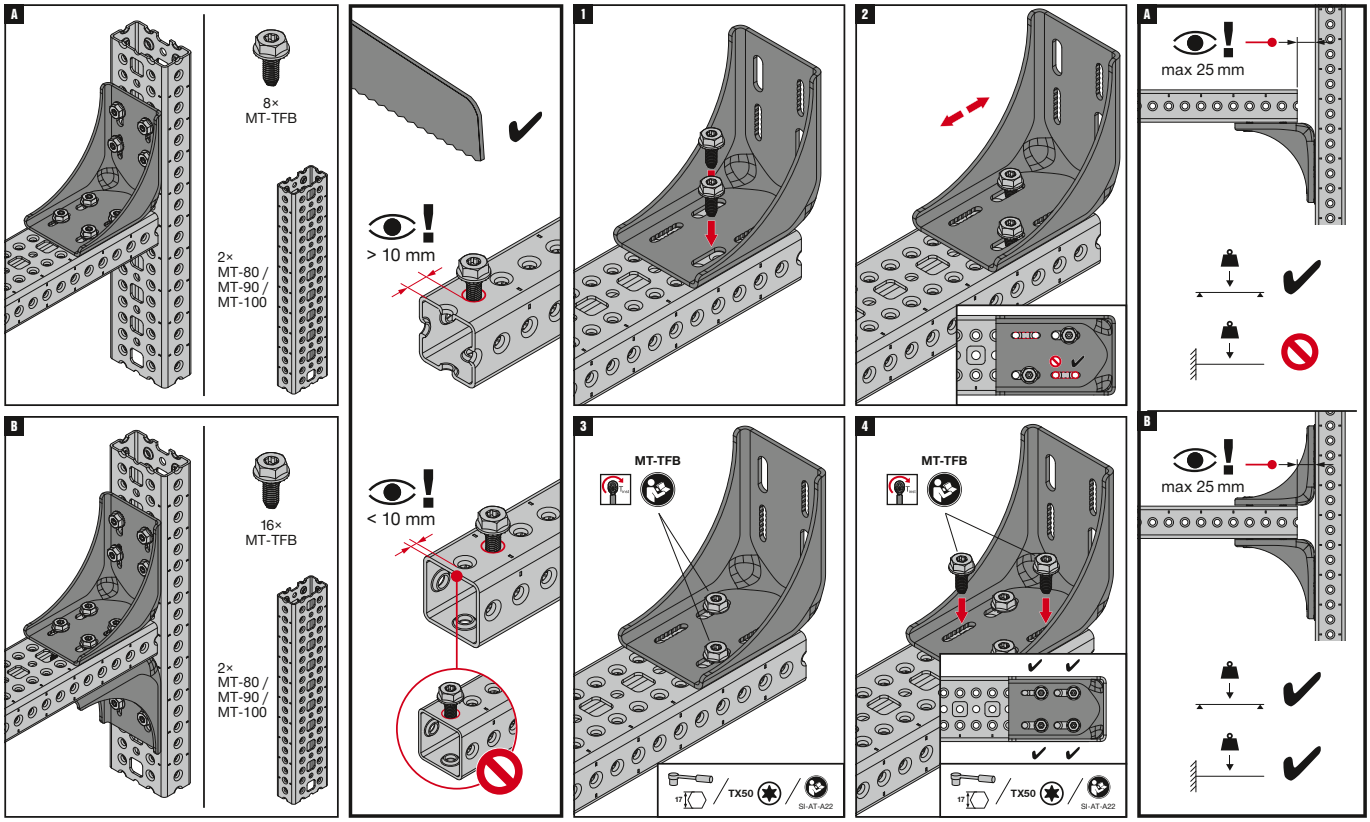

The latest IFU (Instruction For Use) is available on Hilti Online. Please check for any revisions before installing the product.

4

MT Box Profiles Connectors

90° Connectors - Outdoor

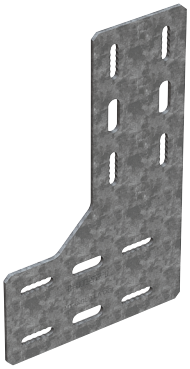

Applications

- Assembling and bracing modular support structures consisting of MT-70, MT-80, MT-90(H) or MT-100 box profiles
- Multidisciplinary MEP support structures combining a wide range of media such as air ducts, cable trays, piping, etc.
- Ceiling-mounted MEP support structures with heavy loads such as ceiling grids and utility piping and drainage

Technical data

Material composition	Q355 or better steel
Surface finish	Hot-dip galvanized - for outdoor use

Advantages

- Faster to install – one-step assembly using Hilti MT Thread Forming Bolts (MT-TFB) and compatible with the Hilti Adaptive Torque system for hassle-free installations (compatible tool and SI-AT module required)
- Versatile and secure connections - use vertical oblong holes to adjust height in 5mm (1/4“) increments and cloud holes with thread forming bolts (MT-TFB) for secure connections between MTheavy boxed profiles
- Adaptable – unlike welding, gusset plates allow modular metal framing to be modified during installation and for future MEP requirements
- Part of the Hilti MT System – an economical, all-in-one solution for virtually all modular MEP support structures

MT-C-GSP L OC Connector - Outdoor

Order Designation	Technical data	Sales pack Quantity	Item number	
MT-C-GSP L OC	Outdoor, low to moderate pollution (C3 / C4 - low)	10 pc	**2272073**	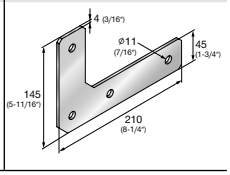

MT-C-GSP L A OC Connector - Outdoor

Order Designation	Technical data	Sales pack Quantity	Item number	
MT-C-GSP L A OC	Outdoor, low to moderate pollution (C3 / C4 - low)	10 pc	**2332786**	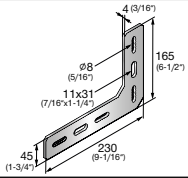

MT Box Profiles Connectors

90° Connectors - Outdoor

4

MT-C-GSP T OC Angle Connector - Outdoor

Order Designation	Technical data	Sales pack Quantity	Item number	
MT-C-GSP T OC	Outdoor, low to moderate pollution (C3 / C4 - low)	10 pc	**2272074**	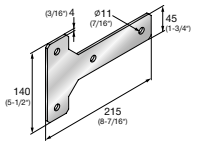

MT-C-GSP T A OC Angle Connector - Outdoor

Order Designation	Technical data	Sales pack Quantity	Item number	
MT-C-GSP T A OC	Outdoor, low to moderate pollution (C3 / C4 - low)	10 pc	**2332785**	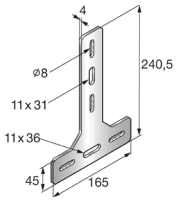

MT-C-GLP T OC Angle Connector - Outdoor

Order Designation	Technical data	Sales pack Quantity	Item number	
MT-C-GLP T OC	Outdoor, low to moderate pollution (C3 / C4 - low)	8 pc	**2272075**	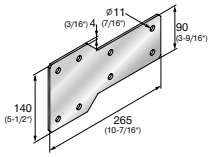

MT-C-GLP T A OC Angle Connector - Outdoor

Order Designation	Technical data	Sales pack Quantity	Item number	
MT-C-GLP T A OC	Outdoor, low to moderate pollution (C3 / C4 - low)	8 pc	**2332784**	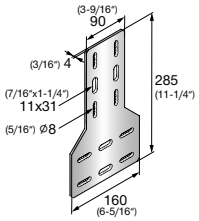

MT-C-GLP X A OC Angle Connector - Outdoor

Order Designation	Technical data	Sales pack Quantity	Item number	
MT-C-GLP X A OC	Outdoor, low to moderate pollution (C3 / C4 - low)	10 pc	**2332783**	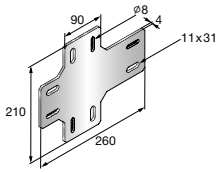

MT-C-GLP L A OC Angle Connector - Outdoor

Order Designation	Technical data	Sales pack Quantity	Item number	
MT-C-GLP L A OC	Outdoor, low to moderate pollution (C3 / C4 - low)	8 pc	**2430769**	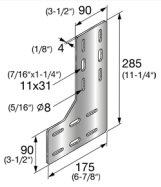

4

MT Box Profiles Connectors
90° Connectors - Outdoor

Technical data MT Connectors

Item image	Load drawing	Order Designation	+ Fz	- Fz	± Fx	± Fy
	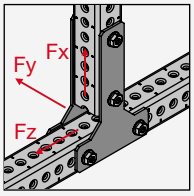	**MT-C-GSP T OC**	7,1 kN	7,1 kN	46,7 kN	5,9 kN

Design notes
- Shown load values are recommended values with partial safety factors for actions and resistance included
- Design value = 1.4 * recommended value
- The design resistance of the products is defined in accordance with EN1993

Technical data MT Connectors

Item image	Load drawing	Order Designation	+ Fz	- Fz	± Fx	± Fy
	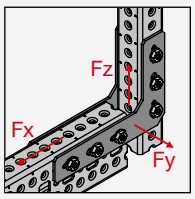	**MT-C-GSP L A OC**	14,0 kN	14,3 kN	19,8 kN	2,6 kN
	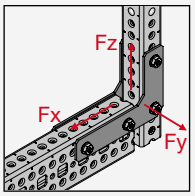	**MT-C-GSP L OC**	10,9 kN	11,1 kN	13,7 kN	3,5 kN
	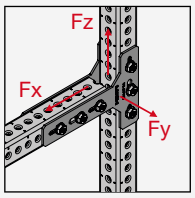	**MT-C-GSP T A OC**	16,8 kN	16,8 kN	33,4 kN	2,1 kN
	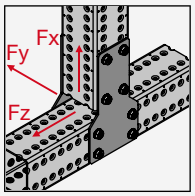	**MT-C-GLP T OC**	25,0 kN	25,0 kN	86,7 kN	8,4 kN

Design notes
- Shown load values are recommended values with partial safety factors for actions and resistance included
- Design value = 1.5 * recommended value
- The design resistance of the products is defined in accordance with EN1993

MT Box Profiles Connectors
90° Connectors - Outdoor

Technical data MT Connectors

Item image	Load drawing	Order Designation	+ Fz	- Fz	± Fx	± Fy
	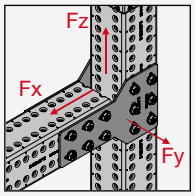	**MT-C-GLP T A OC**	24,7 kN	24,7 kN	66,1 kN	4,3 kN
	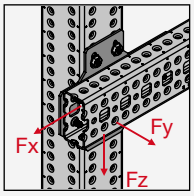	**MT-C-GLP X A OC**	12,7 kN	12,7 kN	7,8 kN	3,7 kN
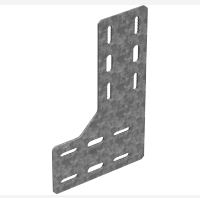	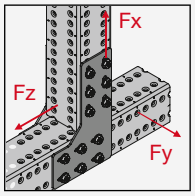	**MT-C-GLP L A OC**	15,3 kN	15,2 kN	28,2 kN	3,4 kN

Design notes
- Shown load values are recommended values with partial safety factors for actions and resistance included
- Design value = 1.5 * recommended value
- The design resistance of the products is defined in accordance with EN1993

MT Box Profiles Connectors

90° Connectors - Outdoor

4

Operation Instruction

MT-C-GSP L OC

2289569-07.2020

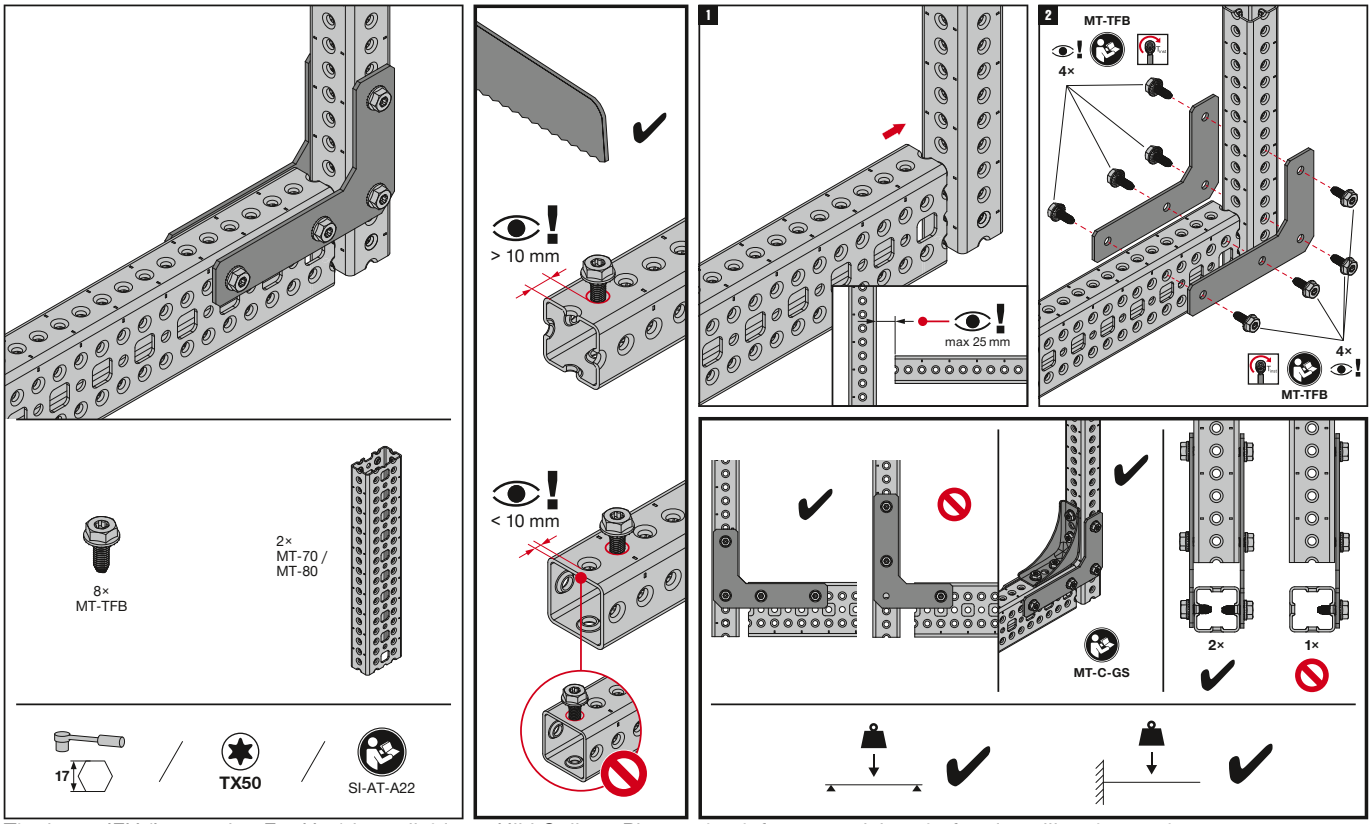

The latest IFU (Instruction For Use) is available on Hilti Online. Please check for any revisions before installing the product.

MT-C-GSP L A OC

2334573-07.2021

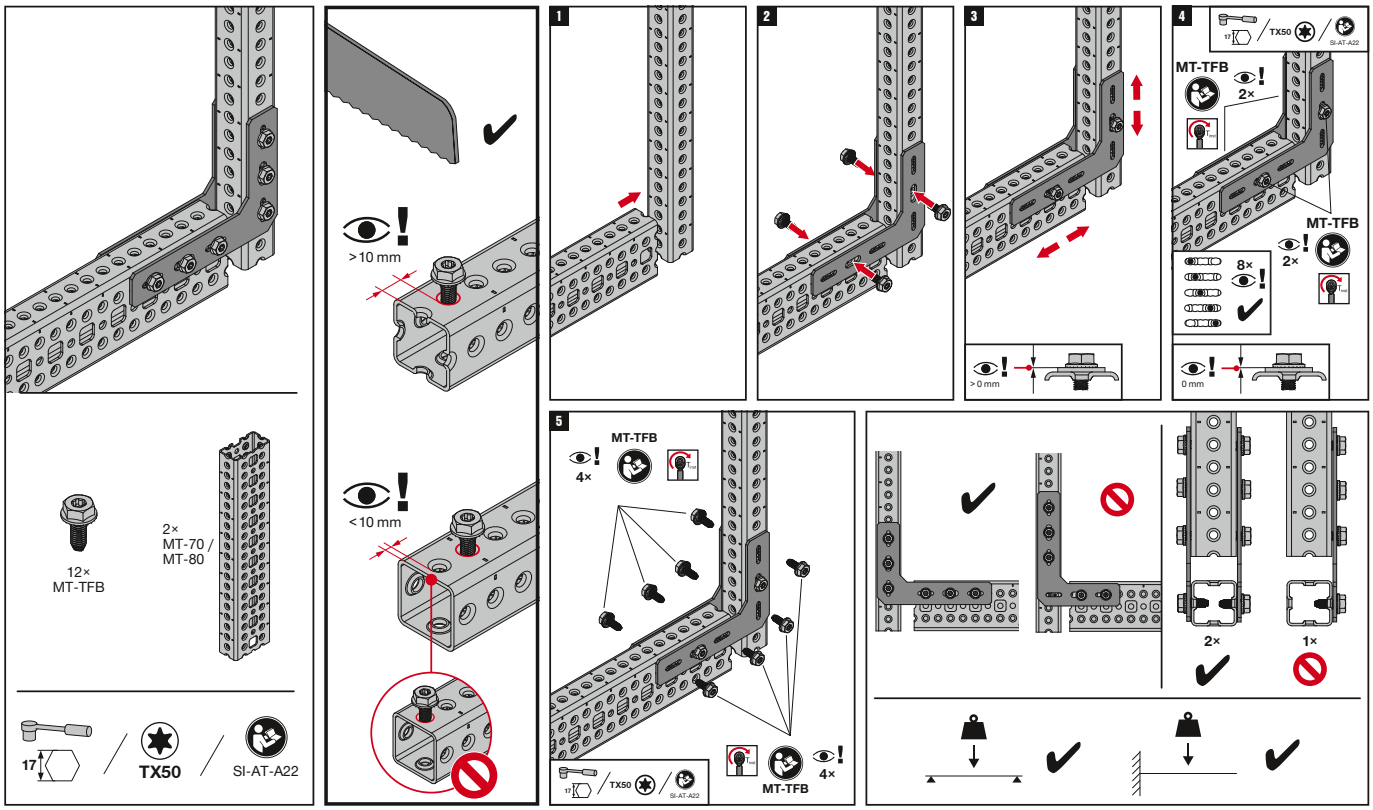

The latest IFU (Instruction For Use) is available on Hilti Online. Please check for any revisions before installing the product.

4

MT Box Profiles Connectors

90° Connectors - Outdoor

Operation Instruction

MT-C-GSP T OC

2290690-06.2020

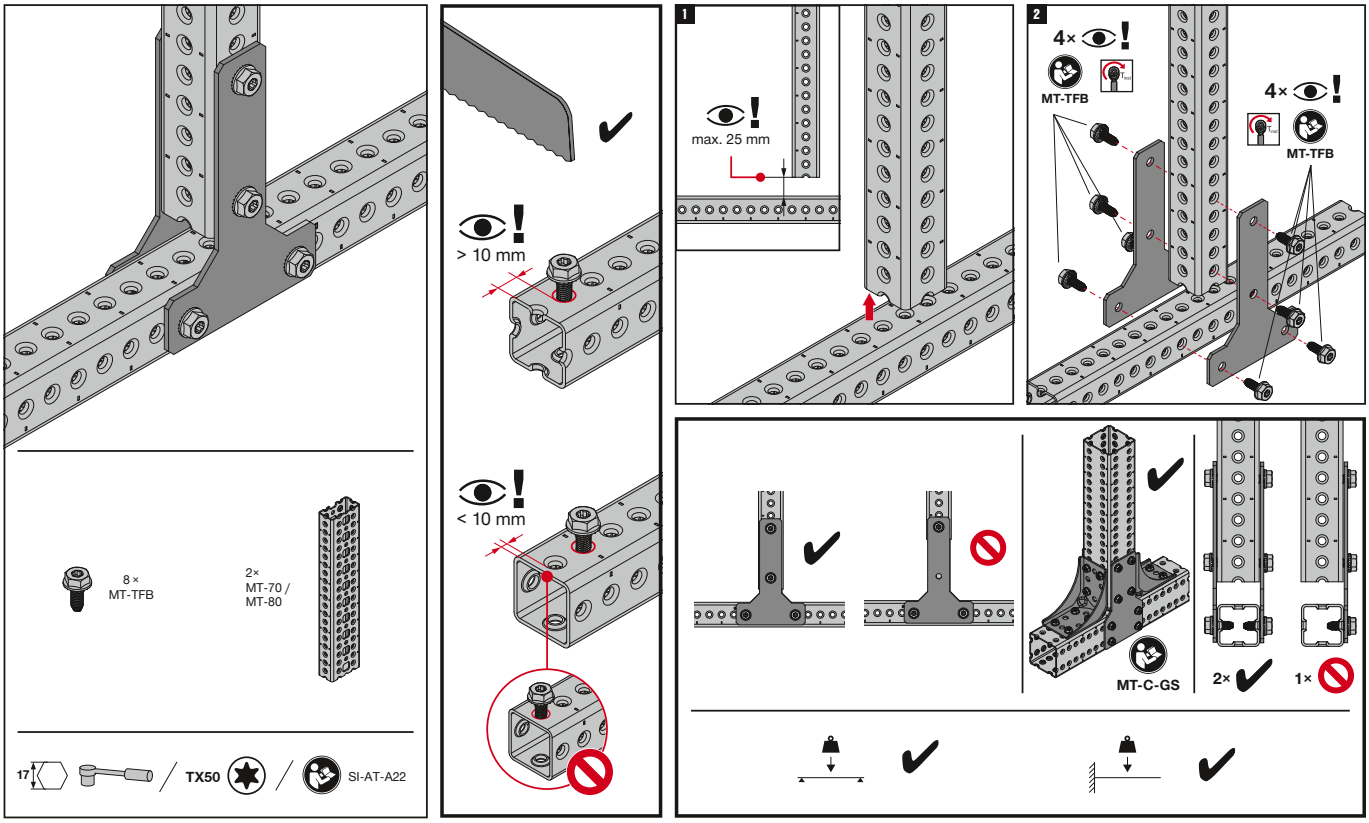

The latest IFU (Instruction For Use) is available on Hilti Online. Please check for any revisions before installing the product.

MT-C-GSP T A OC

2334586-07.2021

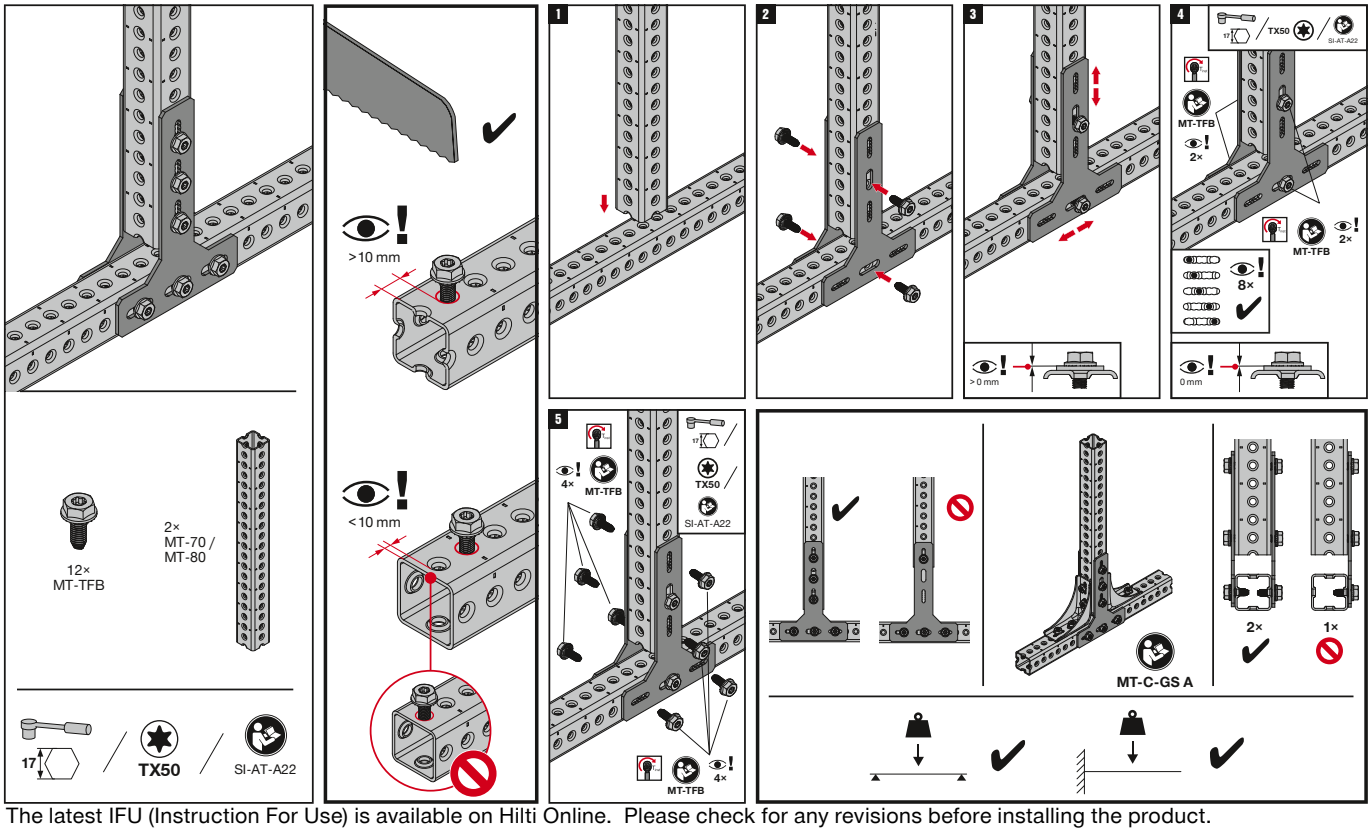

The latest IFU (Instruction For Use) is available on Hilti Online. Please check for any revisions before installing the product.

4

MT Box Profiles Connectors

90° Connectors - Outdoor

Operation Instruction

MT-C-GLP T OC

2290691-06.2020

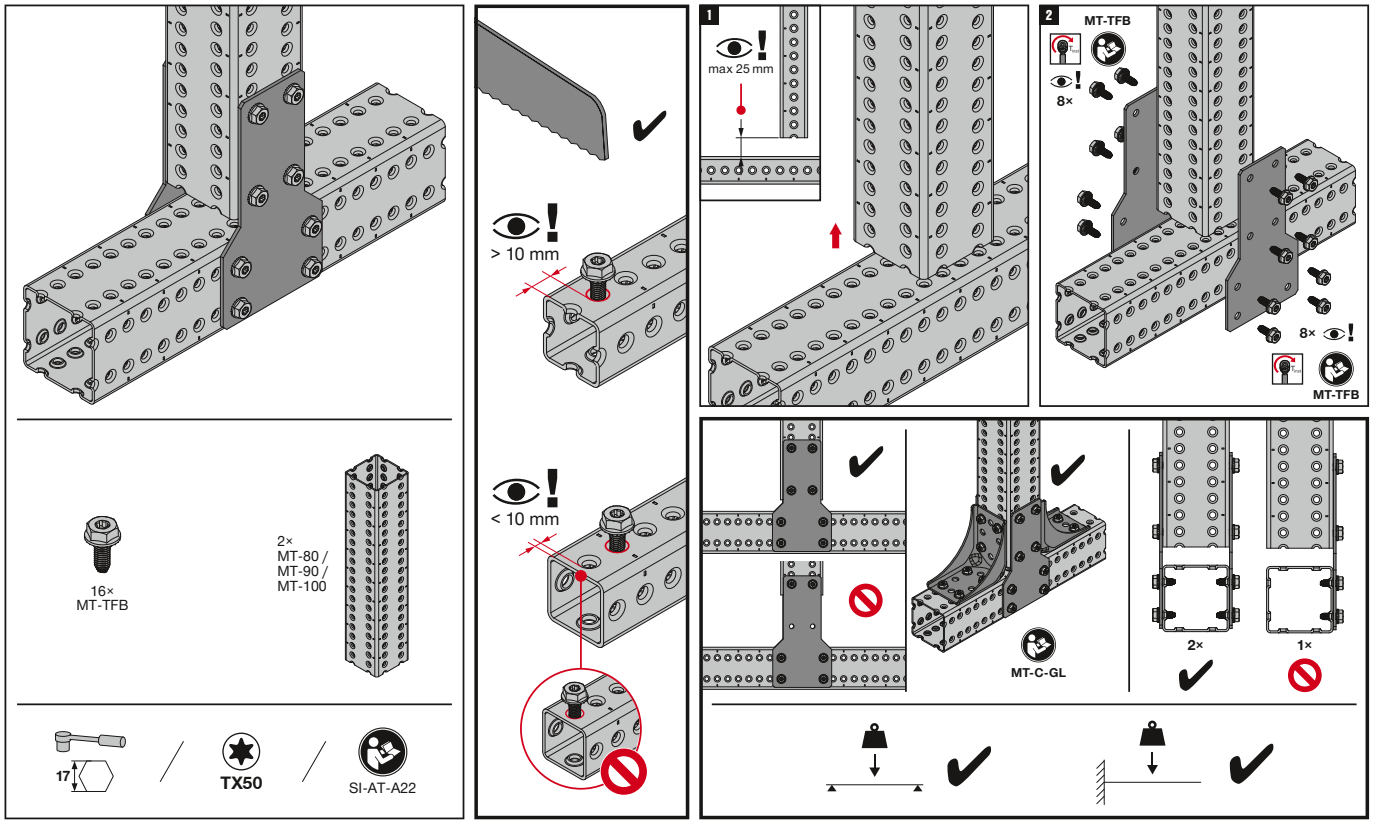

The latest IFU (Instruction For Use) is available on Hilti Online. Please check for any revisions before installing the product.

MT-C-GLP T A OC

2334585-07.2021

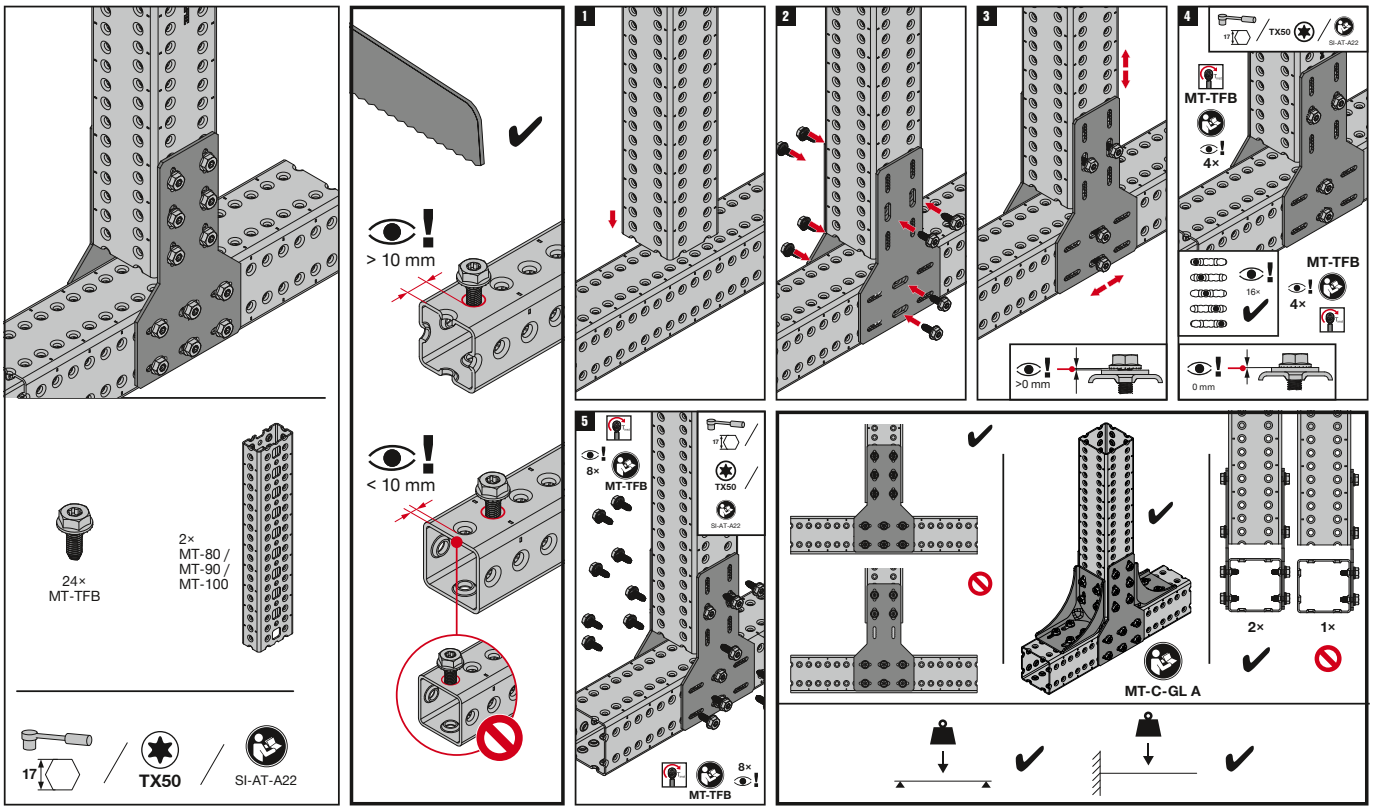

The latest IFU (Instruction For Use) is available on Hilti Online. Please check for any revisions before installing the product.

4

MT Box Profiles Connectors

90° Connectors - Outdoor

Operation Instruction

MT-C-GLP X A OC

2334584-07.2021

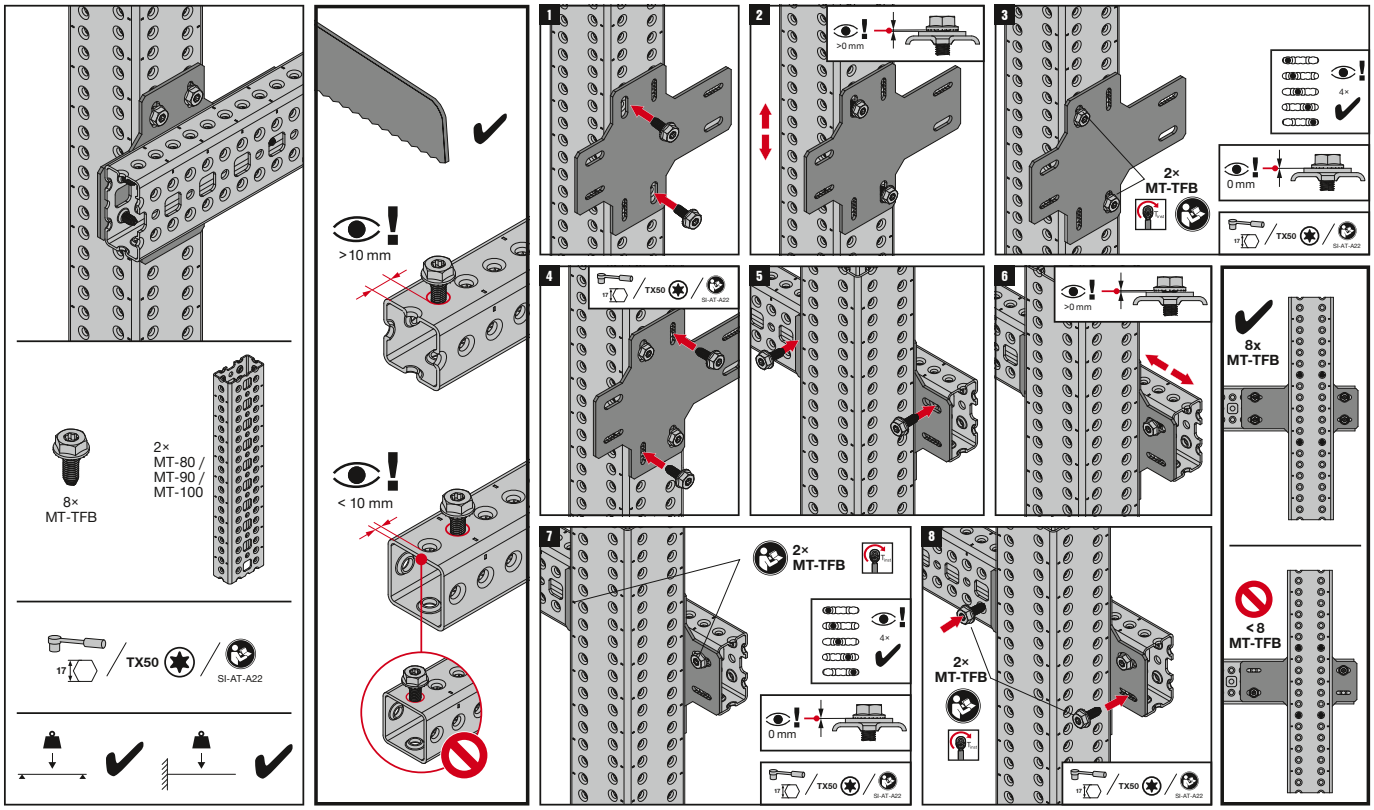

The latest IFU (Instruction For Use) is available on Hilti Online. Please check for any revisions before installing the product.

MT-C-GLP L A OC

2436649-04.2024

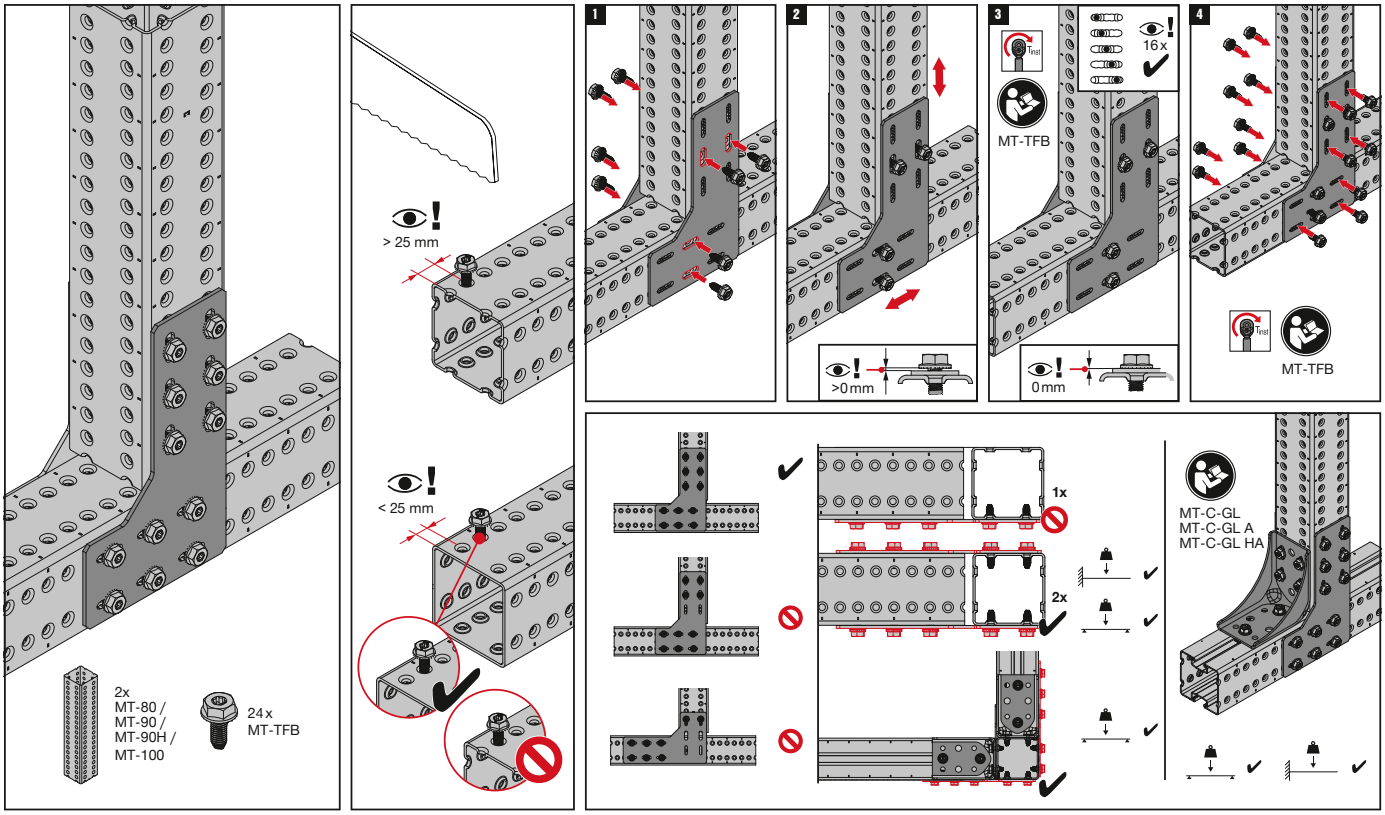

The latest IFU (Instruction For Use) is available on Hilti Online. Please check for any revisions before installing the product.

4

MT Box Profiles Connectors

90° Connectors - Outdoor

Operation Instruction

MT-C-GL HA OC

2436827-04.2024

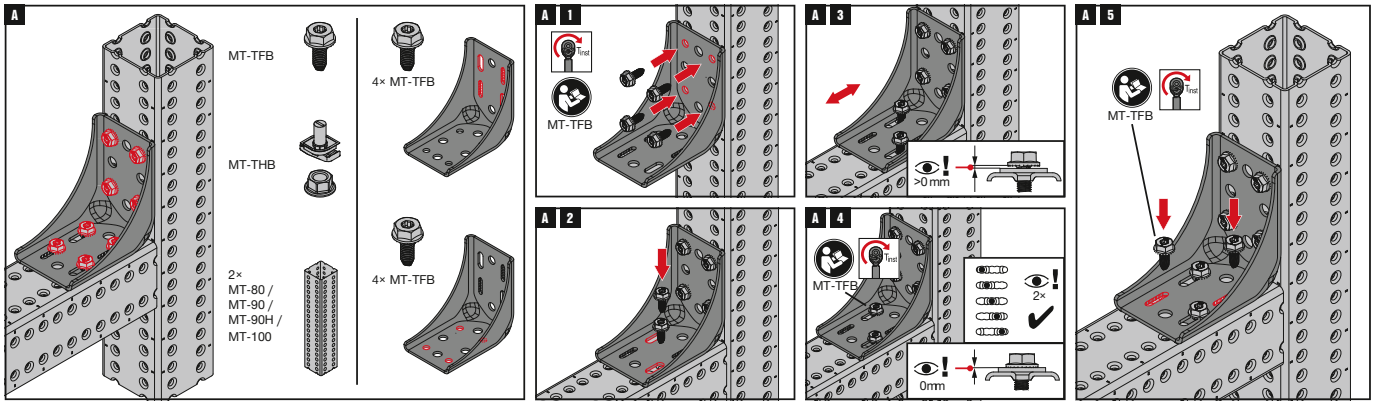

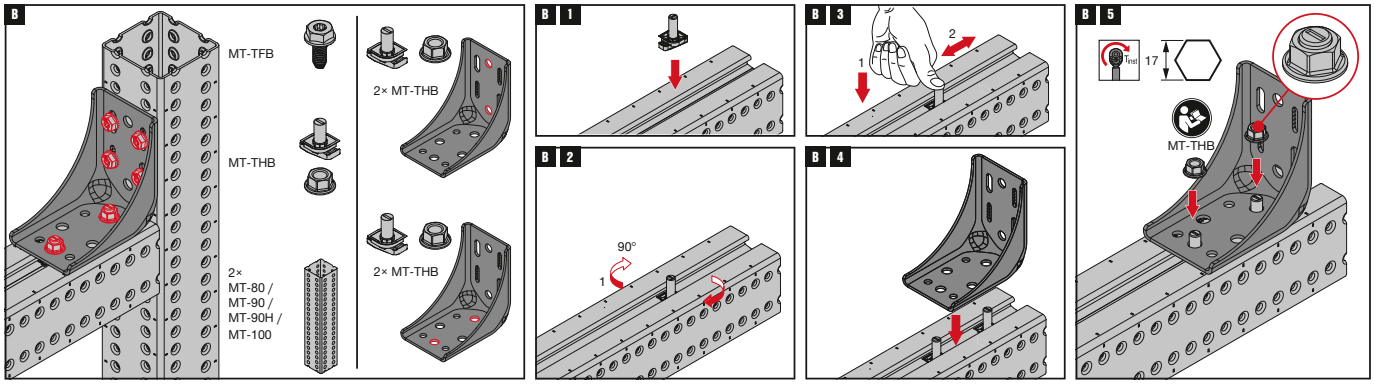

The latest IFU (Instruction For Use) is available on Hilti Online. Please check for any revisions before installing the product.

MT-C-GS HA OC

2436931-05.2024

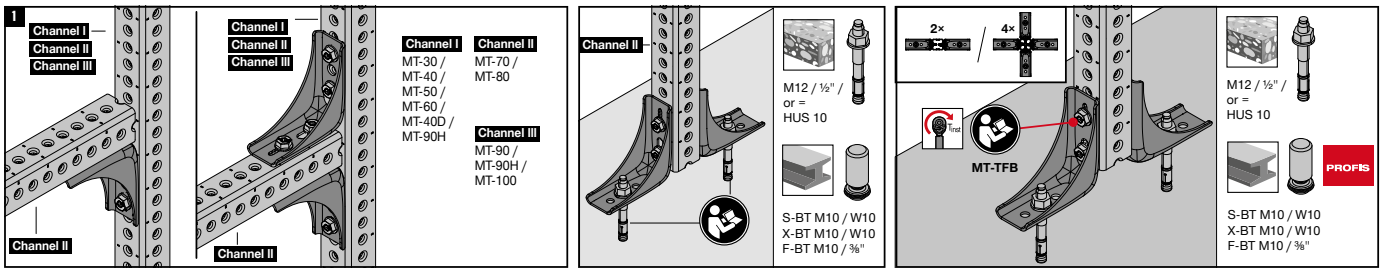

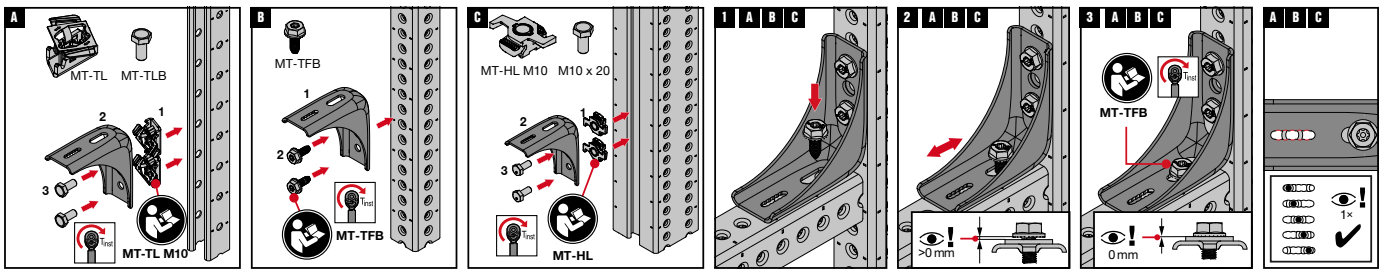

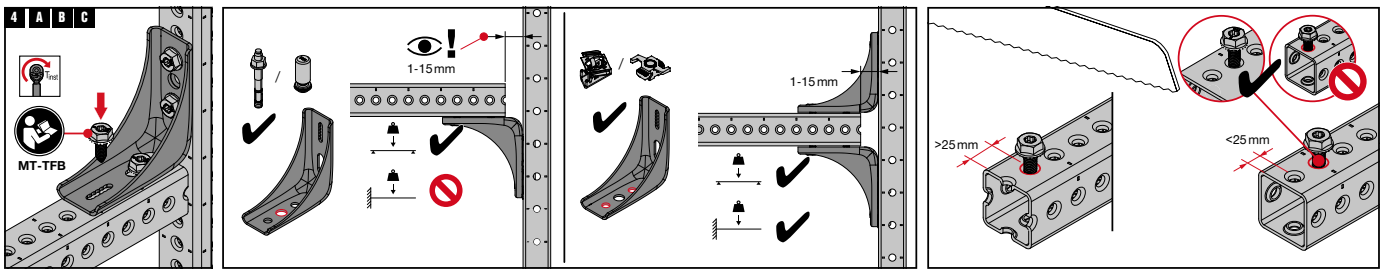

The latest IFU (Instruction For Use) is available on Hilti Online. Please check for any revisions before installing the product.

MT Box Profiles Connectors

Splice Connectors - Outdoor

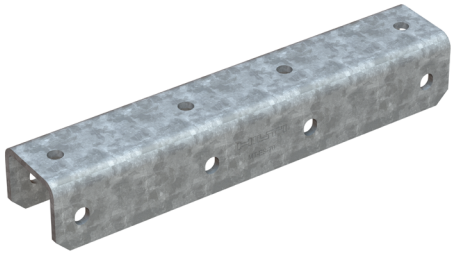

Applications

- Extending MT-70 or MT-80 box profiles by fastening them together end-to-end
- Assembling metal framing for MEP support structures when longer spans or increased floor/ceiling clearance are required
- Suitable for use in moderately corrosive environments

Advantages

- Part of the Hilti MT system – an economical, all-in-one solution for virtually all modular MEP support structures
- Easy to install – one-step assembly using Hilti MT-TFB thread-forming bolts
- Adaptable – unlike welding, splice clevises allow modular metal framing to be modified for future MEP requirements

Technical data

Material composition	Q355 or better steel
Surface finish	Hot-dip galvanized - for outdoor use

MT-ES-70 OC Splice Connector - Outdoor

Order Designation	Technical data	Sales pack Quantity	Item number	
MT-ES-70 OC	Outdoor, low to moderate pollution (C3 / C4 - low)	8 pc	**2272078**	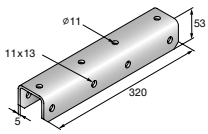

MT-ES-90 OC Splice Connector - Outdoor

Order Designation	Technical data	Sales pack Quantity	Item number	
MT-ES-90 OC	Outdoor, low to moderate pollution (C3 / C4 - low)	4 pc	**2272076**	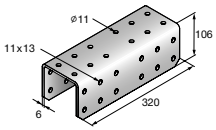

MT Box Profiles Connectors
Splice Connectors - Outdoor

Technical data MT Splice Connector

Item image	Load drawing	Order Designation	+ Fz	- Fz	± Fx	± Fy	± My
	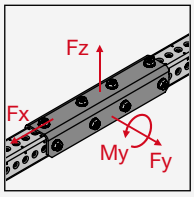	**MT-ES-70 OC**	1,7 kN	1,7 kN	26,3 kN	2,3 kN	1,63 kNm
	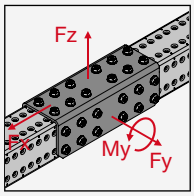	**MT-ES-90 OC**	5,0 kN	4,7 kN	44,3 kN	4,7 kN	3,5 kNm

Design notes
- Shown load values are recommended values with partial safety factors for actions and resistance included
- Design value = 1.5 * recommended value
- The design resistance of the products is defined in accordance with EN1993

MT Box Profiles Connectors

Splice Connectors - Outdoor

4

Operation Instruction

MT-ES-70 OC

2290693-06.2020

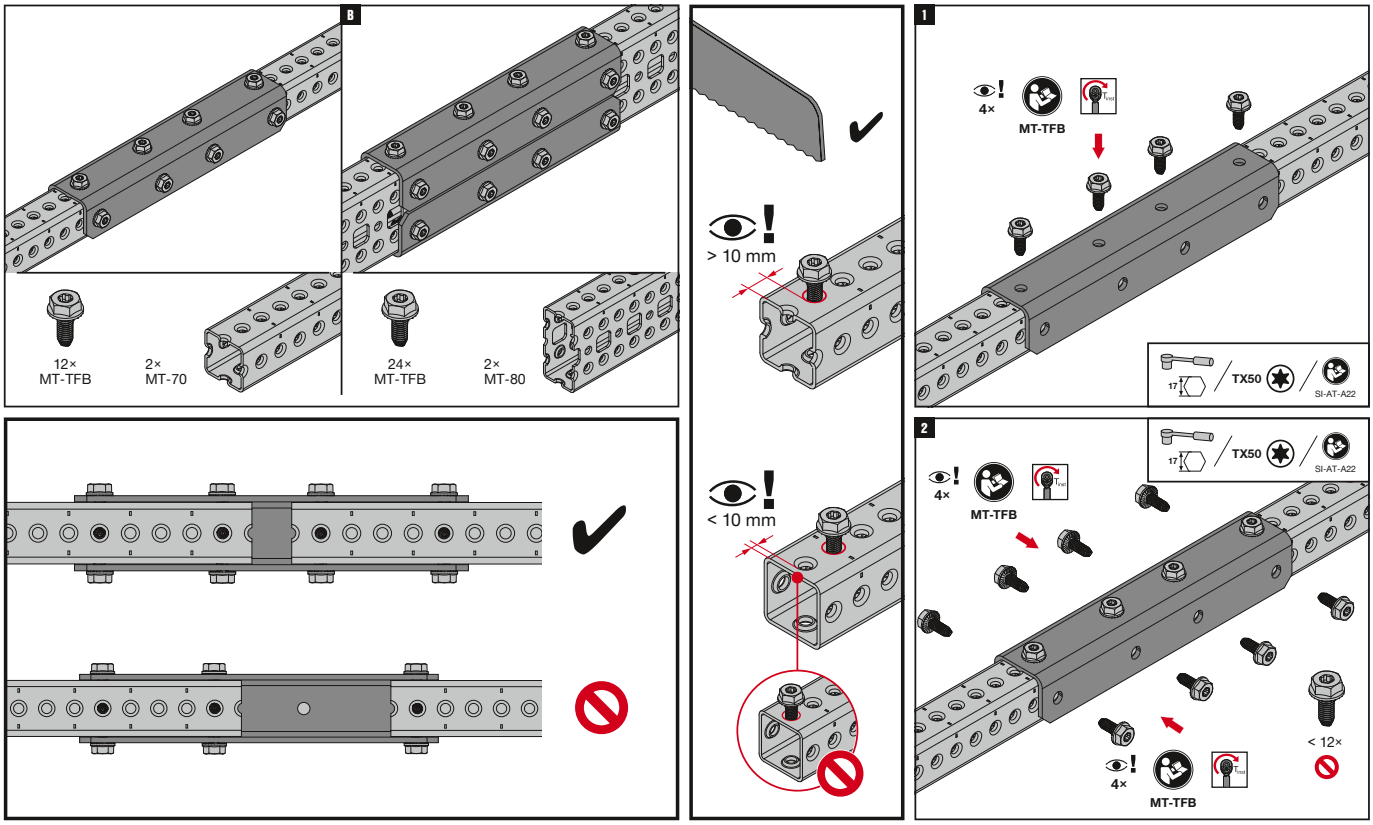

The latest IFU (Instruction For Use) is available on Hilti Online. Please check for any revisions before installing the product.

MT-ES-90 OC

2290692-06.2020

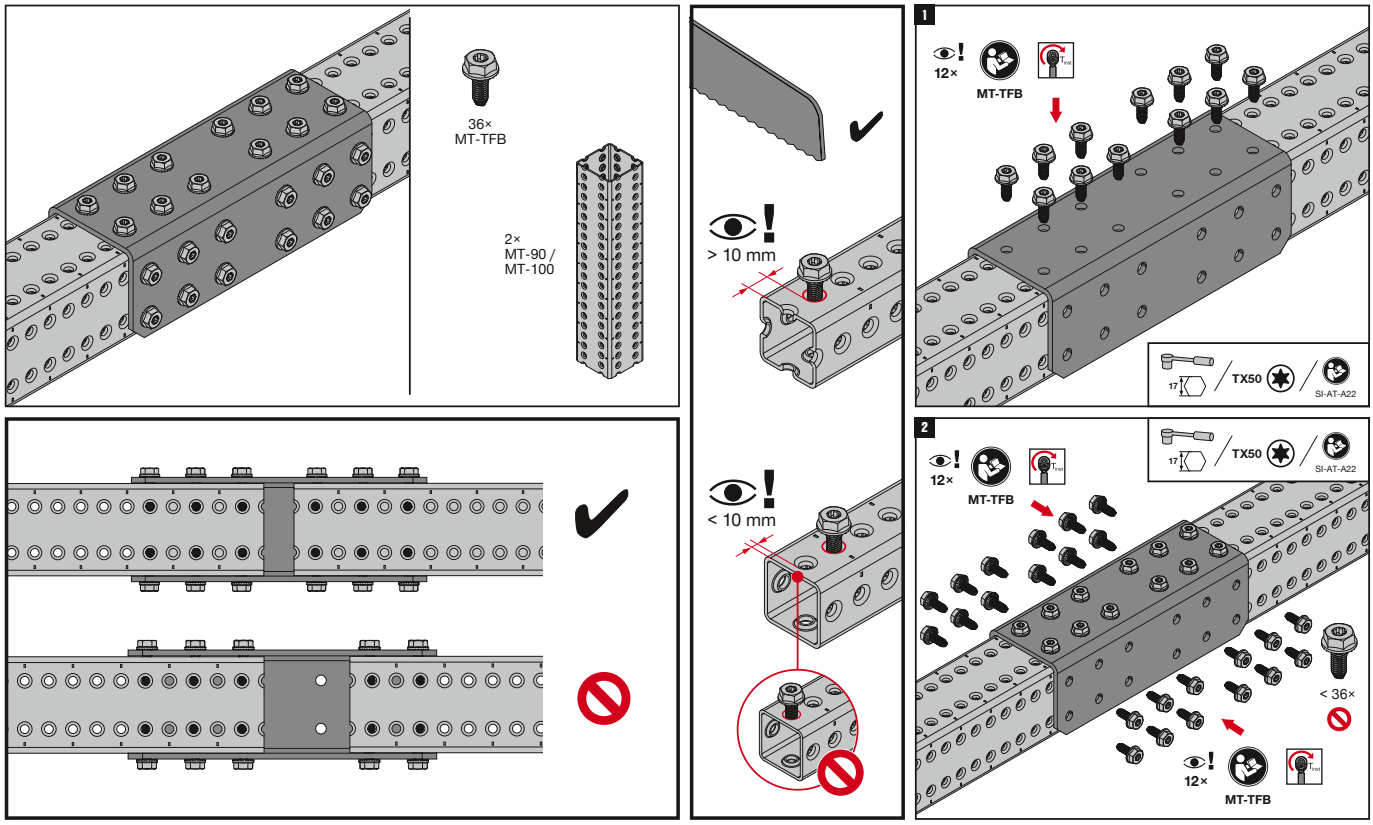

The latest IFU (Instruction For Use) is available on Hilti Online. Please check for any revisions before installing the product.

MT Channel Clamp - Outdoor

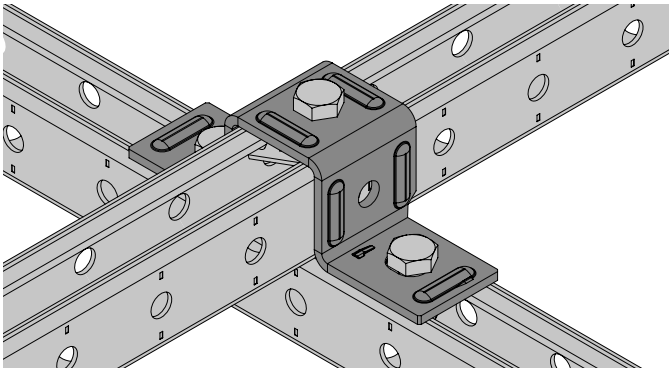

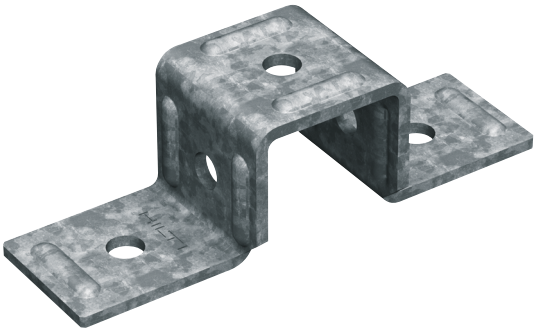

Applications

- Cross-connection of one C-girder to another Channel or girder
- Suitable for use in moderately corrosive environments

Advantages

- Compatible with MT Twist-Lock and MT Thread Forming Bolt Channel connectors – for much faster, adaptable assembly
- Universal – complete many different applications using few parts
- Twist-lock and Thread Forming Bolt Channel connector takes up shear and tensile loads

Technical data

Material composition	Q235 or better steel
Surface finish	Hot-dip galvanized - for outdoor use

MT-CC-70 OC Channel Clamp - Outdoor

Order Designation	Technical data	Sales pack Quantity	Item number	
MT-CC-70 OC	Outdoor, low to moderate pollution (C3 / C4 - low)	16 pc	**2322404**	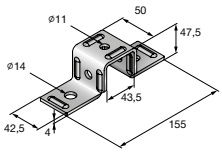

Technical data Channel Clamp

Item image	Load drawing	Order Designation	+ Fz	- Fz	± Fx	± Fy
	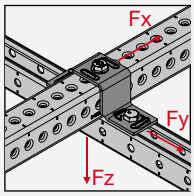	**MT-CC-70 OC**	-	5,4 kN	2,5 kN	3,6 kN

Design notes
- Shown load values are recommended values with partial safety factors for actions and resistance included
- Design value = 1.4 * recommended value
- The design resistance of the products is defined in accordance with EN1993

MT Channel Clamps - Outdoor

Operation Instruction

MT-CC-70

232516-04.2021

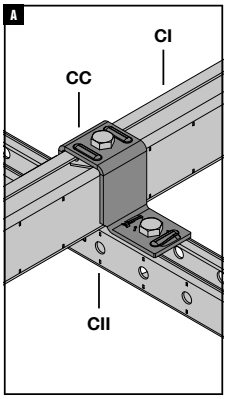

CC	CI		CII	
MT-CC-30	MT-30	1× MT-TLB	1× MT-30 / MT-40 / MT-50 / MT-60 / MT-40D	2× MT-TLB
MT-CC-30D	MT-30D			
MT-CC-55	MT-55	1× MT-TL M10		2× MT-TL M10
MT-CC-55D	MT-55D			
MT-CC-60	MT-60			
MT-CC-70	MT-70	1× MT-TFB		

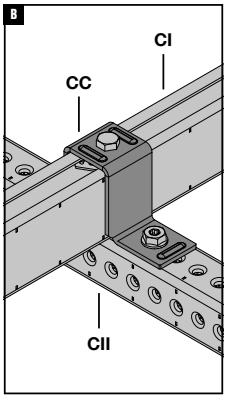

CC	CI		CII	
MT-CC-30	MT-30	1× MT-TLB	1× MT-70 / MT-80 / MT-90 / MT-100	2× MT-TFB
MT-CC-30D	MT-30D			
MT-CC-55	MT-55	1× MT-TL M10		
MT-CC-55D	MT-55D			
MT-CC-60	MT-60			
MT-CC-70	MT-70	1× MT-TFB		

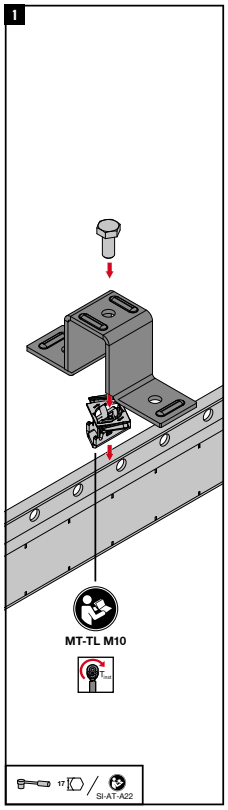

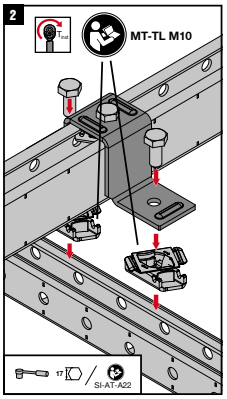

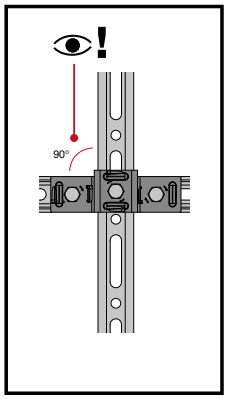

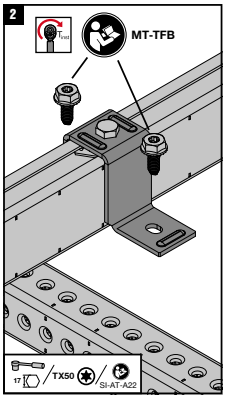

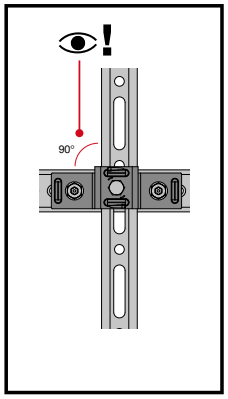

The latest IFU (Instruction For Use) is available on Hilti Online. Please check for any revisions before installing the product.

MT Box Profiles Connectors
Brace Connectors - Outdoor

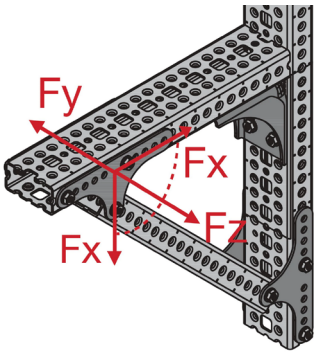

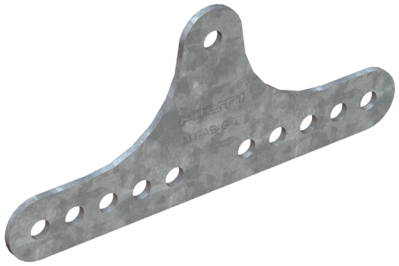

Applications

- Creating a pivoting connection between two MT box profiles
- Bracing metal framing and MEP support structures
- Suitable for use in moderately corrosive environments

Advantages

- Part of the Hilti MT system – an economical, all-in-one solution for virtually all modular MEP support structures
- Adaptable – unlike welding, modular metal framing can be modified for future MEP requirements
- Extensive software support – PROFIS Modular Support Engineering, the MEP Support Selector, Revit® families, and plug-ins for Staad Pro® and Smart 3D® are all available to streamline design and ordering

Technical data

Material composition	Q355 or better steel
Surface finish	Hot-dip galvanized - for outdoor use

MT-AB-G T OC Angle Brace - Outdoor

Order designation	Technical data	Sales pack Quantity	Item number	
MT-AB-G T OC	Outdoor, low to moderate pollution (C3 / C4 - low)	4 pc	**2272116**	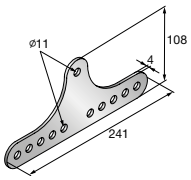

Technical Data Angle Brace

Item image	Load drawing	Order Designation	+ Fz	- Fz	± Fx	± Fy
	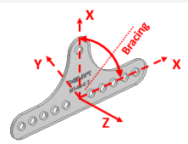	**MT-AB-G T / MT-AB-G T OC**	4,3 kN	4,3 kN	21,4 kN	-

Design notes

- Shown load values are recommended values with partial safety factors for actions and resistance included
- Design value = 1.5 * recommended value
- The design resistance of the products is defined in accordance with EN1993

4

MT Box Profiles Connectors

Brace Connectors - Outdoor

Operation Instruction

MT-AB-G T OC

2294697-06.2020

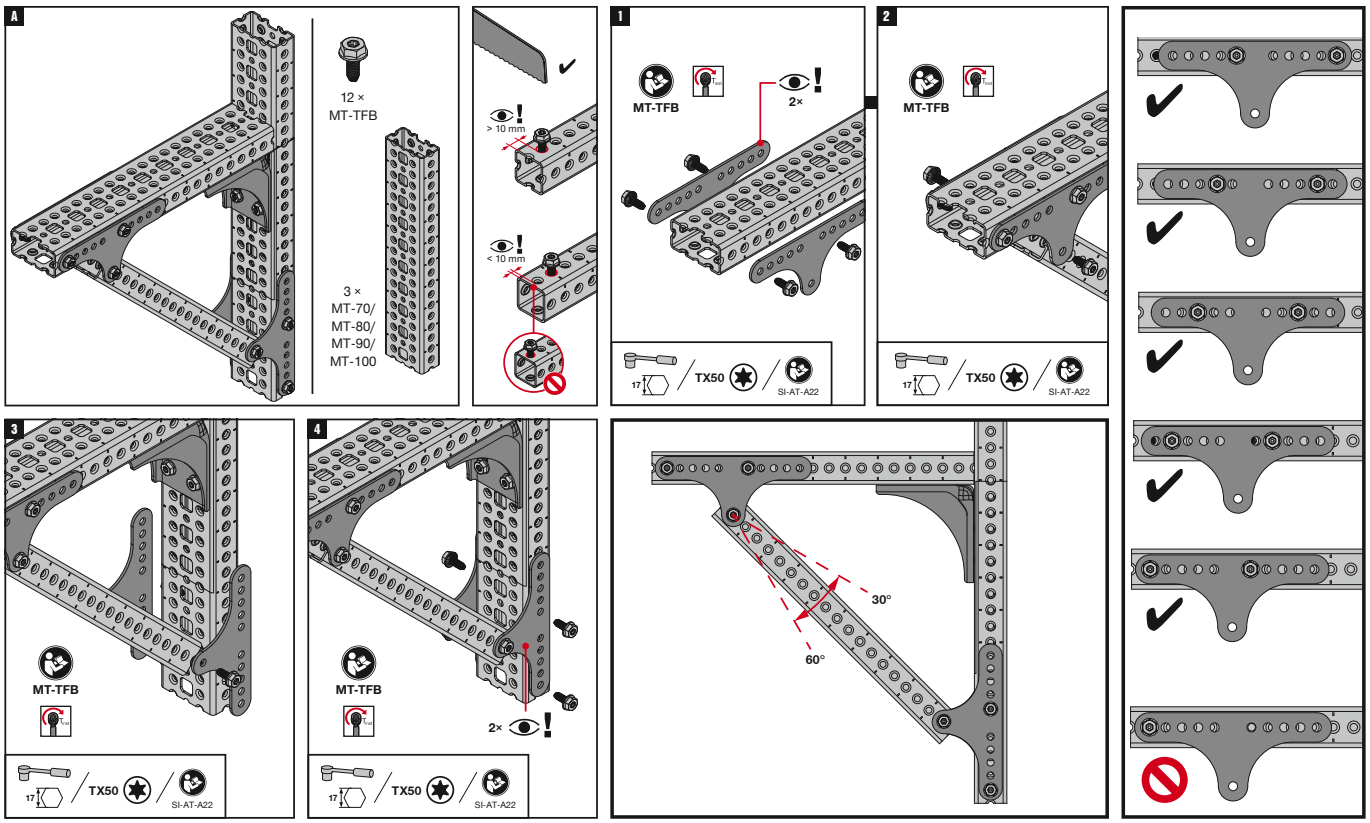

The latest IFU (Instruction For Use) is available on Hilti Online. Please check for any revisions before installing the product.

4

MT Box Profiles Connectors
T-beam - Outdoor

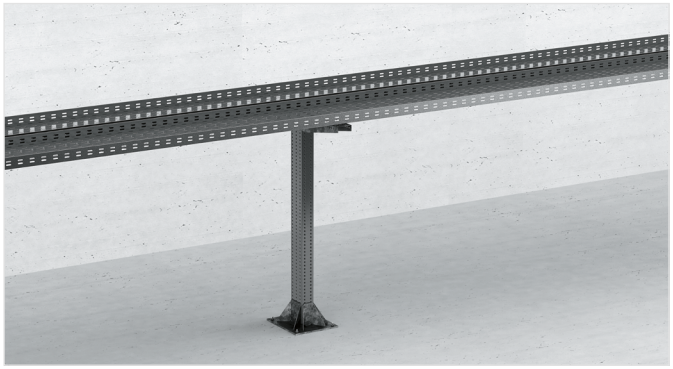

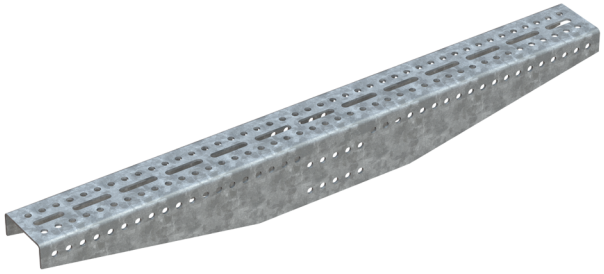

Applications

- Constructing T-beams to support heavy-duty MEP installations by fastening to an upright MT-90 or MT-100 box profile
- Suitable for use in moderately corrosive environments

Advantages

- Part of the Hilti MT system – an economical, all-in-one solution for virtually all modular MEP support structures
- Easy to install – one-step assembly using Hilti MT-TFB thread-forming bolts
- Optimized load-to-weight ratio – engineered for maximum pipe ring/cable tray capacity with minimum self-weight

Technical data

Material composition	Q355 or better steel
Surface finish	Hot-dip galvanized - for outdoor use

MT-U-GL1 OC T-beam - Outdoor

Order Designation	Technical data	Sales pack Quantity	Item number	
MT-U-GL1 OC	Outdoor, low to moderate pollution (C3 / C4 - low)	2 pc	**2272070**	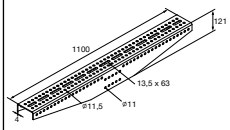

Technical data T-beam

Item image	Load drawing	Order Designation	+ Fz	- Fz	± Fx	± Fy
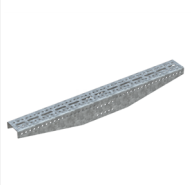	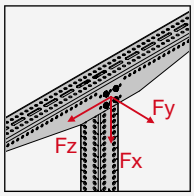	**MT-U-GL1 OC**	23,8 kN	23,8 kN	68,8 kN	6,8 kN

Design notes

- Shown load values are recommended values with partial safety factors for actions and resistance include
- Design value = 1.5 * recommended value
- The design resistance of the products is defined in accordance with EN1993

4

MT Box Profiles Connectors

T-beam Outdoor

Operation Instruction

MT-C-U-GL 1 OC

2312252-09.2020

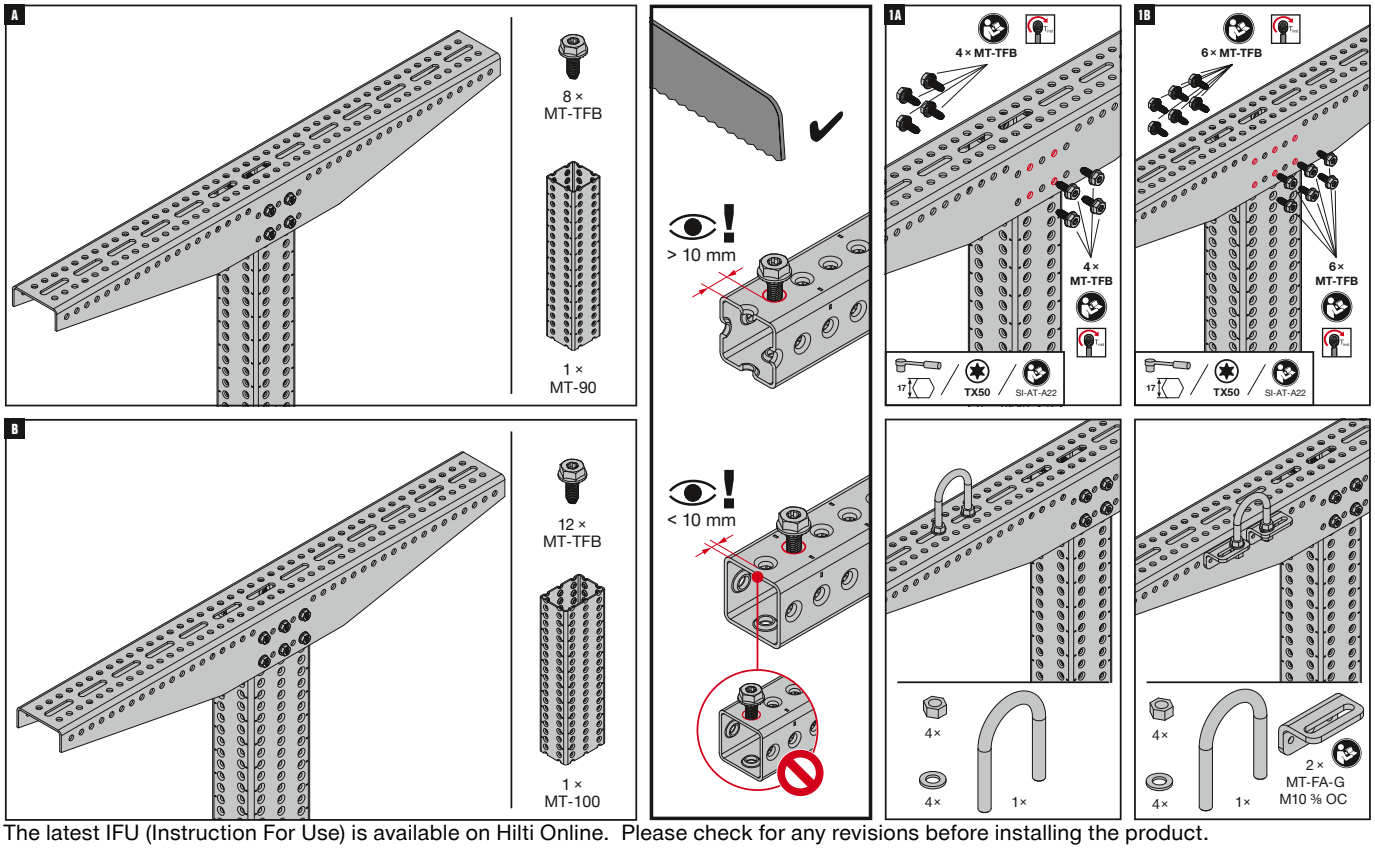

The latest IFU (Instruction For Use) is available on Hilti Online. Please check for any revisions before installing the product.

MT Box Profiles Connectors
Threaded Rod Guide

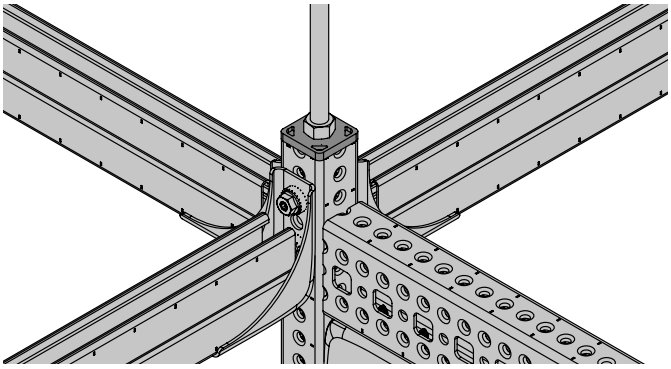

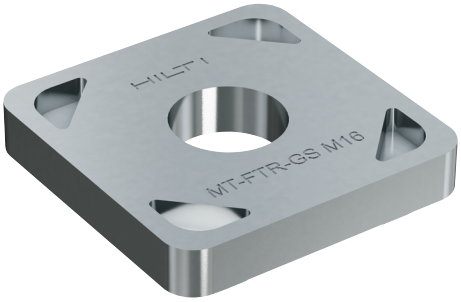

Applications

- Closing the 2 ends of a MT-70 box profile
- Building the core of overhead grids
- Suitable for use in dry, indoor environments

Advantages

- Easy to install – adjustable, modular system
- Flexible – overhead grid system offers you high flexibility in terms of number and type of profiles to be used
- Extensive software support – PROFIS Modular Support Engineering, the MEP Support Selector, Revit® families, and plug-ins for Staad Pro® and Smart 3D® are all available to streamline design and ordering

Technical data

Material composition	Q235 or better steel
Surface finish	Indoor Coated - Electro galvanized

MT-FTR-GS M12 / M16 Threaded Rod Guide

Order designation	Technical data	Sales pack Quantity	Item number	
MT-FTR-GS M12	Dry indoor conditions (C1) Indoor with temporary condensation (C2)	15 pc	**2322417**	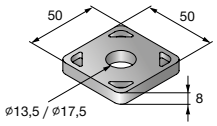
MT-FTR-GS M16		15 pc	**2322418**	

MT Box Profiles Connectors

Thread Forming Bolt Distance Washer

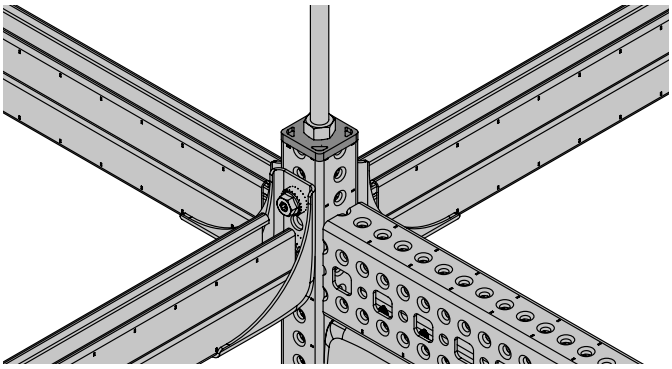

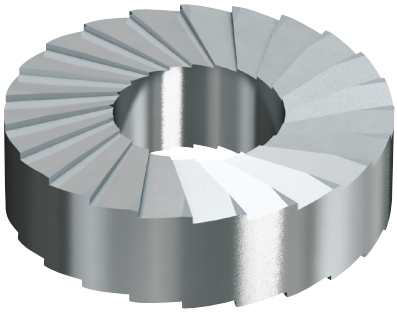

Applications

- Assembling Hilti MT modular MEP support structures

Advantages

- Part of the Hilti MT system – an economical, all-in-one solution for virtually all modular MEP support structures
- Serrated washer – better surface grip to resist loosening over time

Technical data

Material composition	Q355 or better steel
Surface finish	Indoor Coated - Electro galvanized

MT-FTR-GSW Washer

Order designation	Technical data	Sales pack Quantity	Item number	
MT-FTR-GSW	Dry indoor conditions (C1) Indoor with temporary condensation (C2)	20 pc	**2325248**	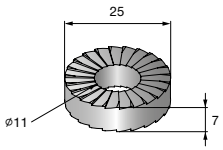

4

MT Box Profiles Connectors
Threaded Rod Fixation - Outdoor

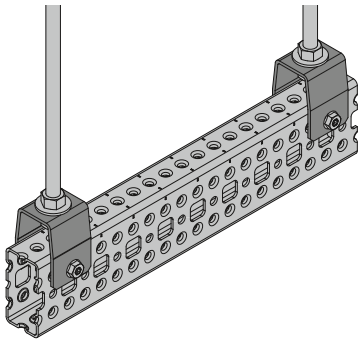

Applications

- Hanger for suspending MT-70 and MT-80 box profiles from threaded rod to create heavy-duty MEP and HVAC trapeze
- Assembling trapeze for MEP and HVAC installations subject to loads too heavy for C-Channels

Advantages

- Simpler inventory – these hangers make it possible to use standard MT box profiles in more situations
- Corrosion resistance – hot-dip galvanized to help protect against moisture and chemical corrosion
- Compatible with MT Thread Forming Bolt Channel connectors – for much faster, adaptable assembly

Technical data

Material composition	Q355 or better steel
Surface finish	Hot-dip galvanized - for outdoor use

MT-CTR-GS M12 / M16 OC Threaded Rod Fixation - Outdoor

Order Designation	Technical data	Sales pack Quantity	Item number	
MT-CTR-GS M12 OC	Outdoor, low to moderate pollution (C3 / C4 - low)	16 pc	**2332789**	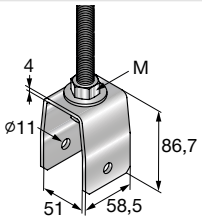
MT-CTR-GS M16 OC		16 pc	**2332790**	

MT-CTR-GL M12 / M16 OC Threaded Rod Fixation - Outdoor

Order Designation	Technical data	Sales pack Quantity	Item number	
MT-CTR-GL M12 OC	Outdoor, low to moderate pollution (C3 / C4 - low)	16 pc	**2332793**	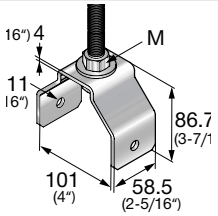
MT-CTR-GL M16 OC		16 pc	**2332796**	

MT Box Profiles Connectors
Threaded Rod Guide, Threaded Rod Fixation

Technical data Threaded rod guide

Item image	Load drawing	Order Designation	+ Fz	- Fz	± Fx	± Fy
	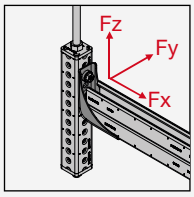	**MT-FTR-GS + MT-40 D**	-	2,0 kN	-	-
	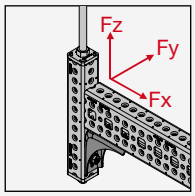	**MT-FTR-GS + MT-80**	-	5,0 kN	-	-

Design notes
- Shown load values are recommended values with partial safety factors for actions and resistance included
- Design value = 1.4 * recommended value
- The design resistance of the products is defined in accordance with EN1993

Technical data Threaded rod fixation

Item image	Load drawing	Order Designation	+ Fz	- Fz	± Fx	± Fy
	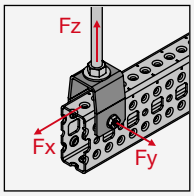	**MT-CTR GS M12 OC**	-	11,0 kN	-	-
		MT-CTR GS M16 OC	-	11,0 kN	-	-
	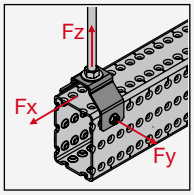	**MT-CTR GL M12 OC**	-	15,0 kN	-	-
		MT-CTR GL M16 OC	-	15,0 kN	-	-

Design notes
- Shown load values are recommended values with partial safety factors for actions and resistance included
- Design value = 1.5 * recommended value
- The design resistance of the products is defined in accordance with EN1993

4

MT Box Profiles Connectors
Threaded Rod Guide

Operation Instruction
MT-FTR-GS M12/M16 / MT-FTR-GSW

2325320-04.2020

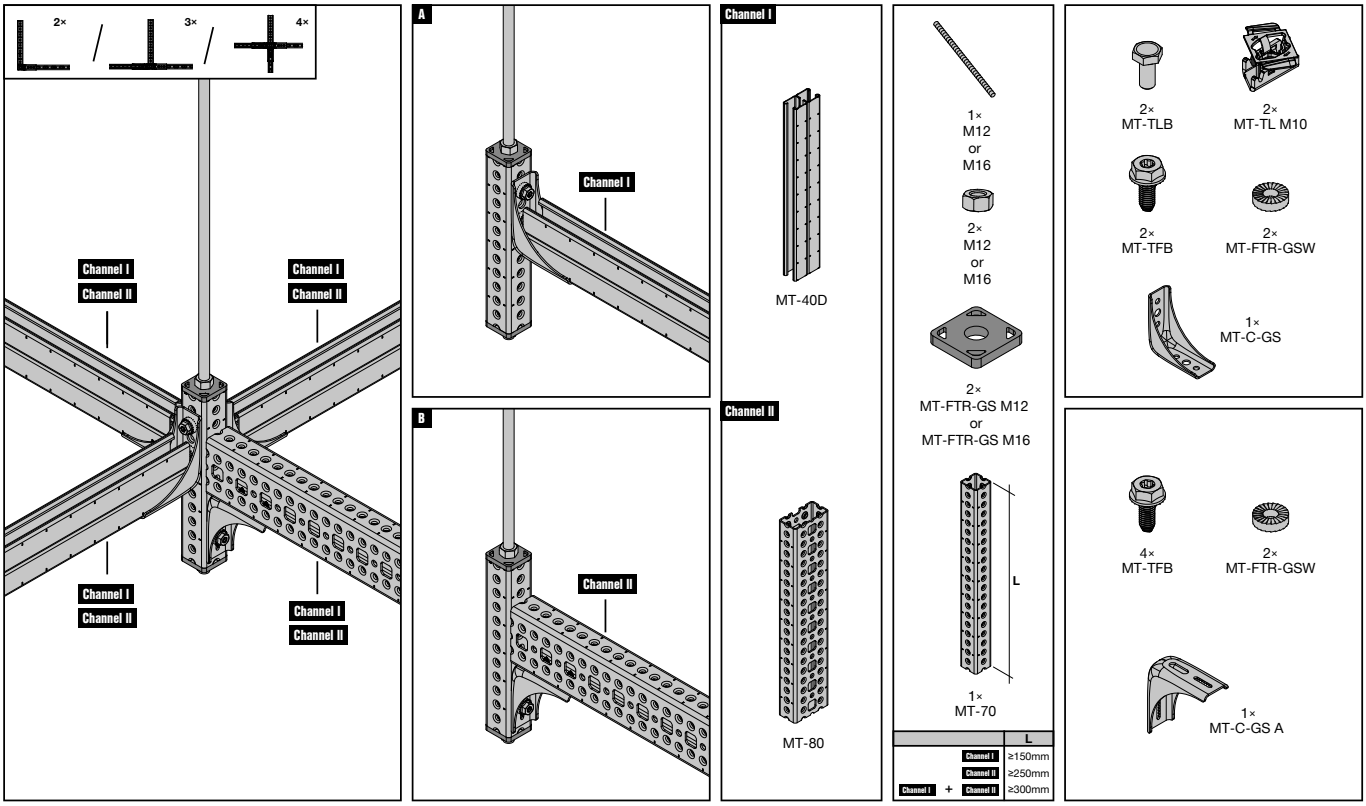

The latest IFU (Instruction For Use) is available on Hilti Online. Please check for any revisions before installing the product.

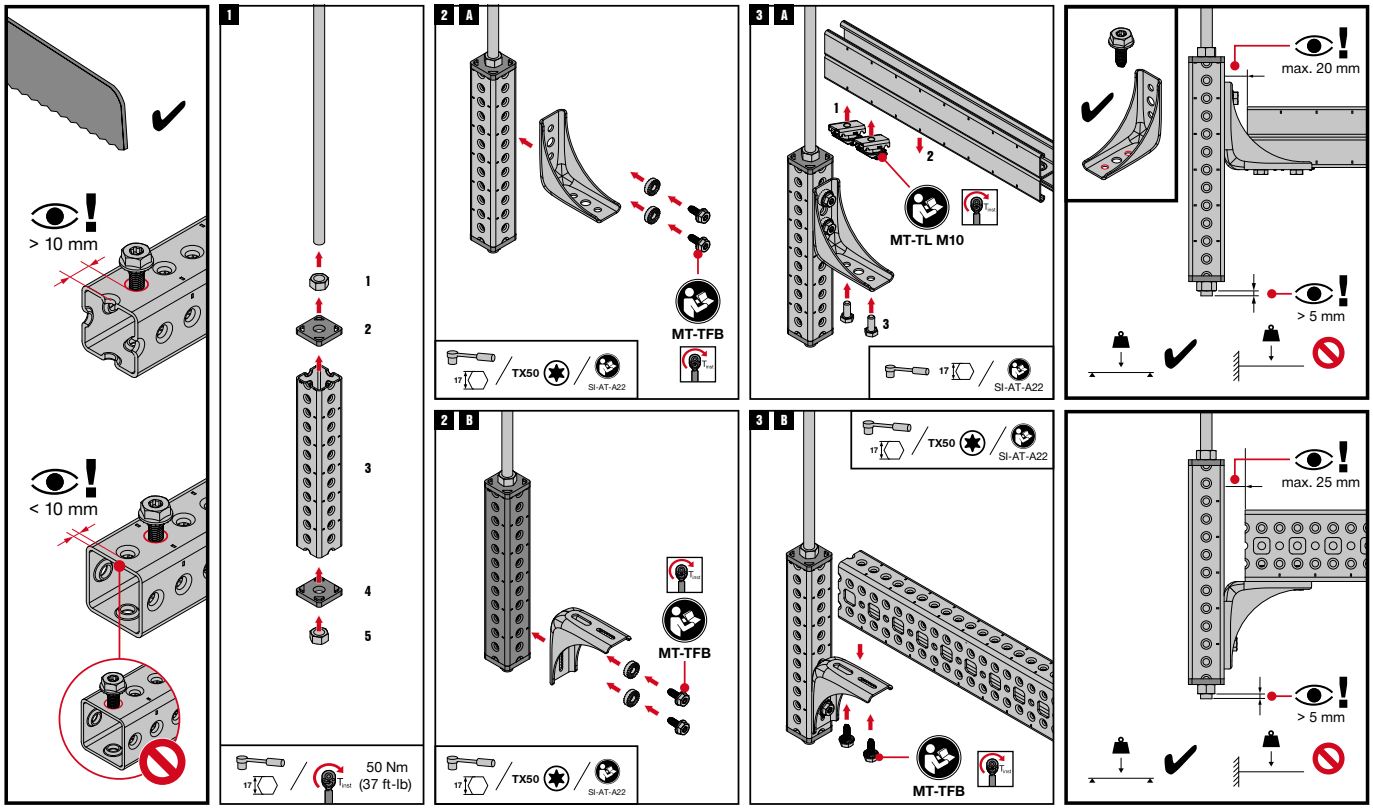

The latest IFU (Instruction For Use) is available on Hilti Online. Please check for any revisions before installing the product.

4

MT Box Profiles Connectors
Threaded Rod Fixation

Operation Instruction
MT-CTR GS OC

2334574-07.2021

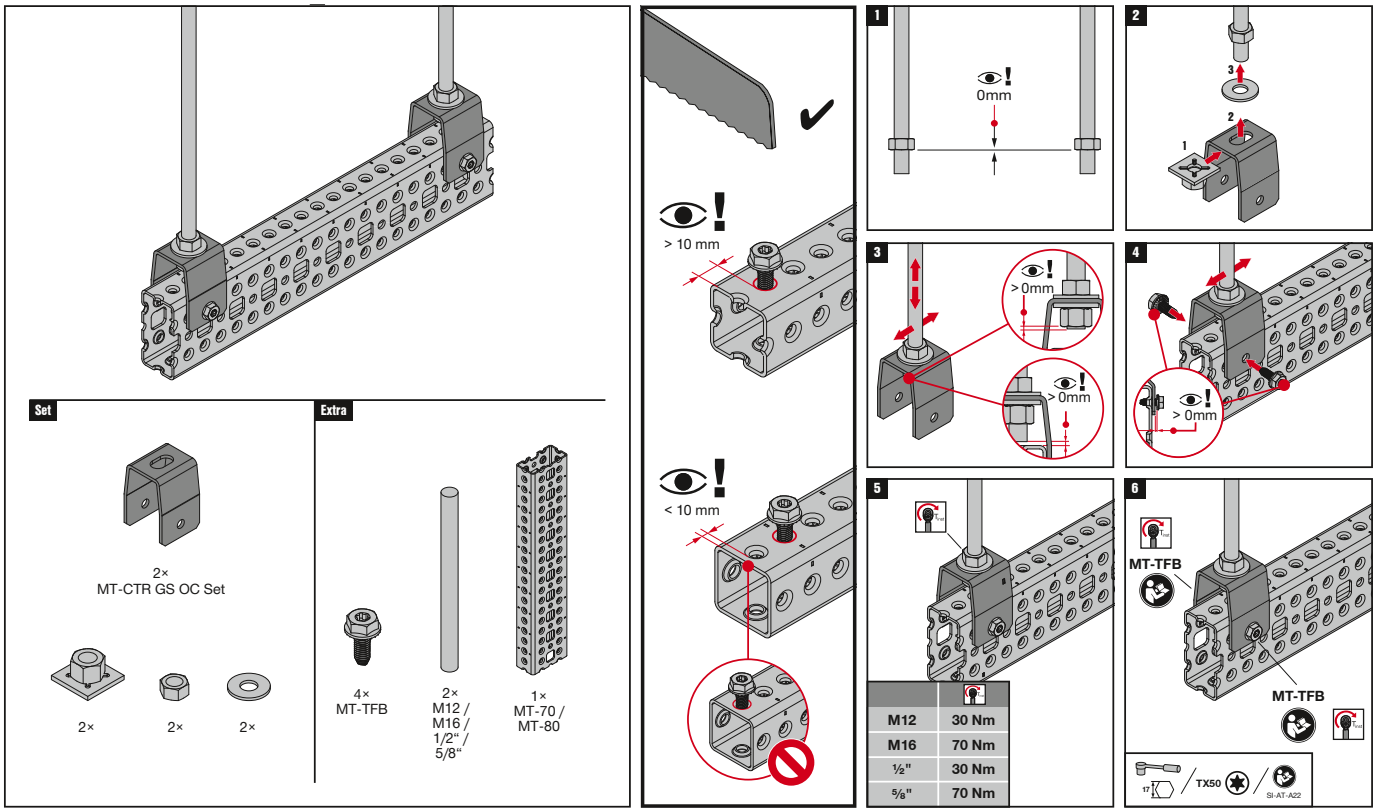

The latest IFU (Instruction For Use) is available on Hilti Online. Please check for any revisions before installing the product.

MT-CTR GL OC

233483-07.2020

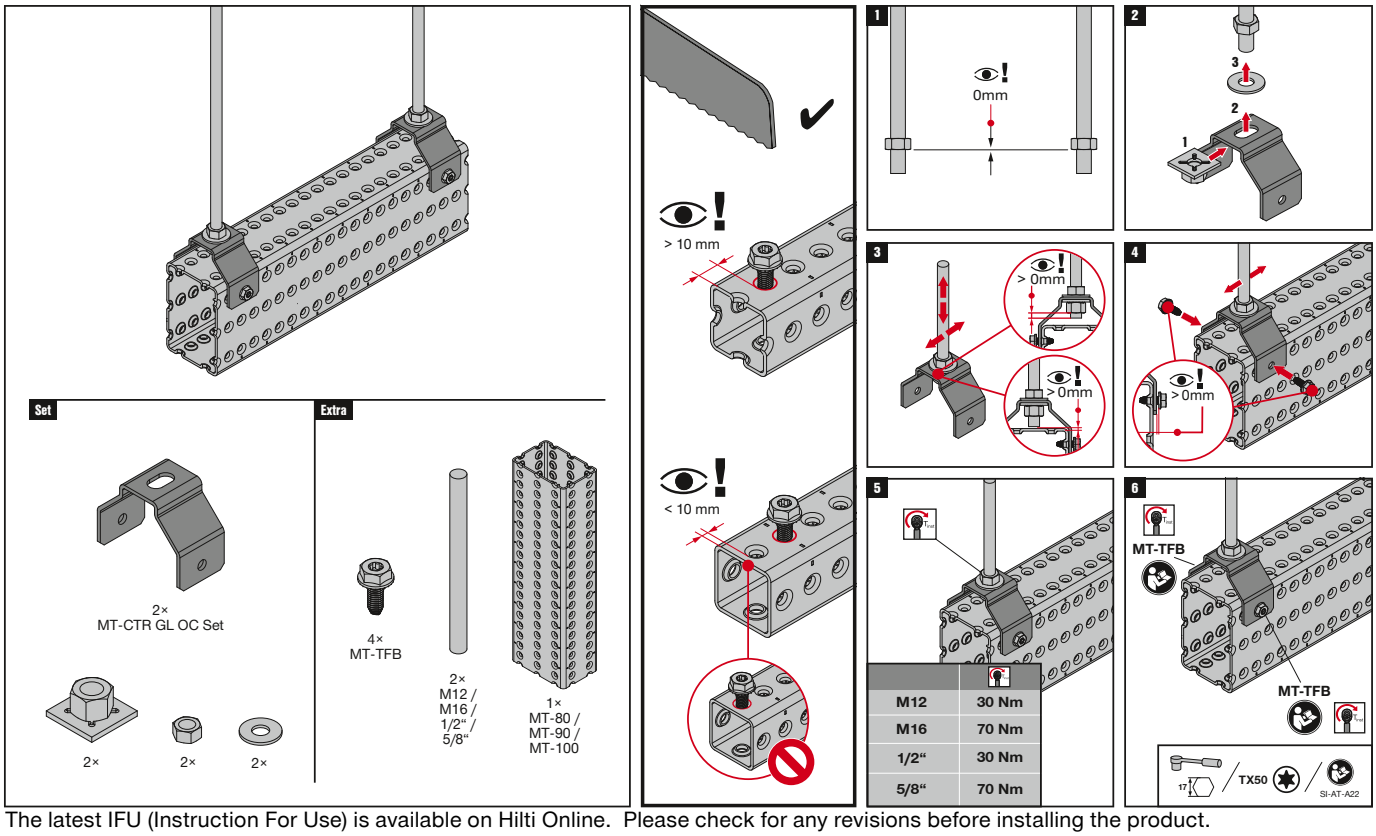

The latest IFU (Instruction For Use) is available on Hilti Online. Please check for any revisions before installing the product.

4

MT Box Profiles Connectors
Pipe Stanchion - Outdoor

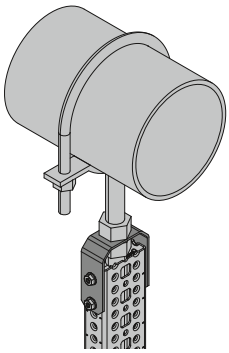

Applications

- Fastening single pipe saddles to the top of a vertical box profile
- Suitable for outdoor environments with low to moderate pollution (C3)

Advantages

- Part of the Hilti MT system – an economical, all-in-one solution for virtually all modular MEP support structures
- Simpler installation – full vertical adjustability from the end of the vertical box profile
- Easier to transport – lower weight compared to previous versions

Technical data

Material composition	Q355 or better steel
Surface finish	Hot-dip galvanized - for outdoor use

MT-C-PS 5/8 / 7/8 / 1-1/4 OC Pipe Stanchion - Outdoor

Order Designation	Technical data	Sales pack Quantity	Item number	
MT-C-PS 5/8 OC	Outdoor, low to moderate pollution (C3 / C4 - low)	10 pc	**2343196**	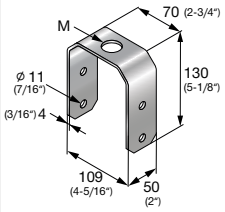
MT-C-PS 7/8 OC		10 pc	**2343197**	
MT-C-PS 1-1/4 OC		10 pc	**2343198**	

4

MT Box Profiles Connectors
Pipe Stanchion - Outdoor

Technical data Pipe Stanchion

Item image	Load drawing	Order Designation	+ Fz	- Fz	± Fy
	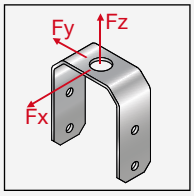	**MT-C-PS 5/8 OC**	-	5,6 kN	1,5 kN
		MT-C-PS 7/8 1 OC	-	5,6 kN	1,5 kN
		MT-C-PS 1-1/4 OC	-	5,6 kN	1,5 kN

Design notes
- Shown load values are recommended values with partial safety factors for actions and resistance included
- Design value = 1.5 * recommended value
- The design resistance of the products is defined in accordance with EN1993

Operation Instruction
MT-C-PS 5/8 OC / MT-C-PS 7/8 OC / MT-C-PS 1–1/4 OC

2347906-10.2021

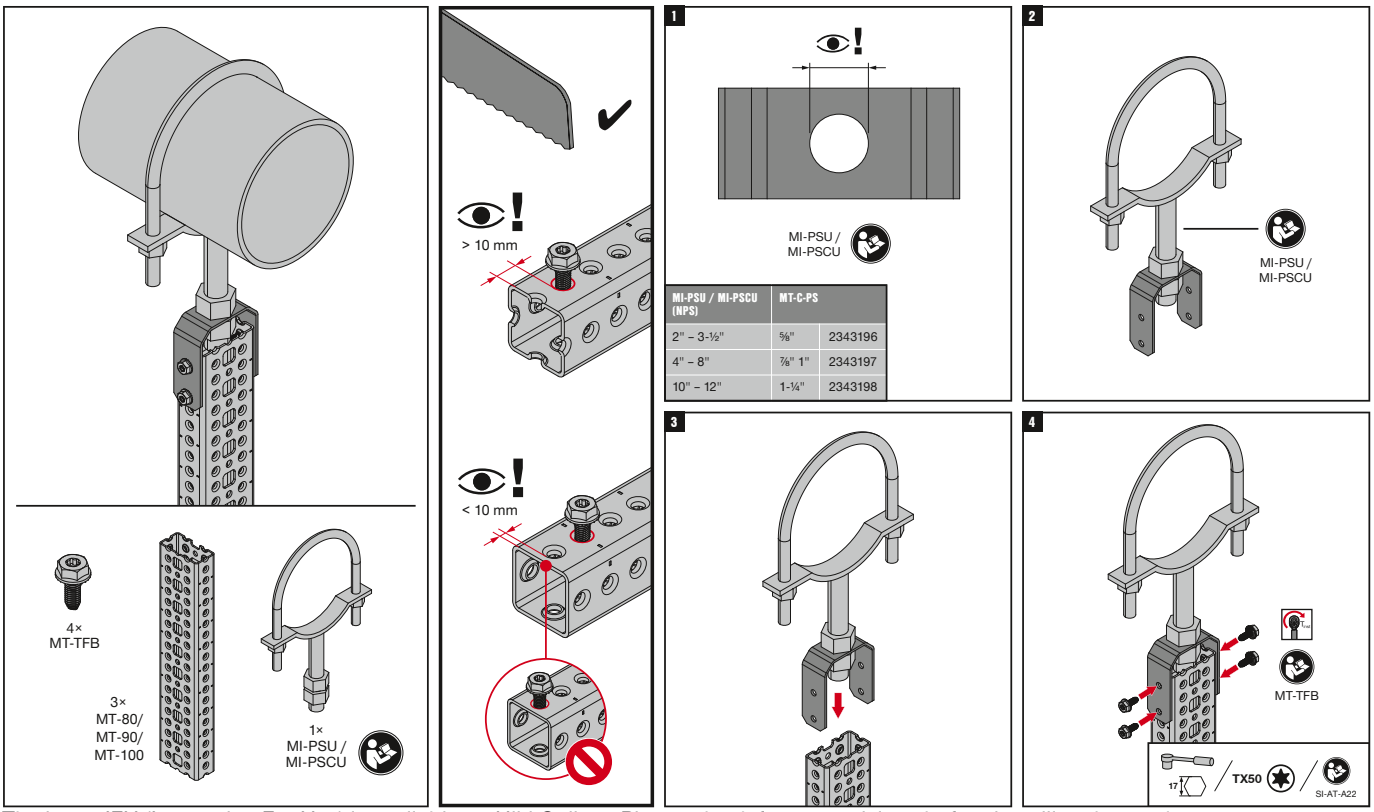

The latest IFU (Instruction For Use) is available on Hilti Online. Please check for any revisions before installing the product.

5

MT Open C-Channel Base Material Connectors

90° Connectors

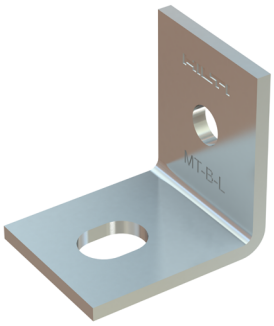

Applications

- Fastening MT C-Channel to concrete floors, walls or ceilings
- Fastening MT C-Channel to structural steel
- Anchoring metal framing and MEP support structures with extra-light loads to a base material

Advantages

- Part of the Hilti MT system – an economical, all-in-one solution for virtually all modular MEP support structures
- Easy to install – compatible with the Hilti MT Twist-Lock, a faster alternative to spring nuts for assembling a modular support system
- Adjustable – slotted anchor hole to simplify baseplate positioning and fastening

Technical data

Material composition	Q235 or better steel
Surface finish	Pre-galvanized - for dry indoor use only

MT-B-L Base Material Connector 1-hole

Order Designation	Technical Data	Sales pack quantity	Item number	
MT-B-L	Dry indoor conditions (C1) Indoor with temporary condensation (C2)	20 pc	**2272086**	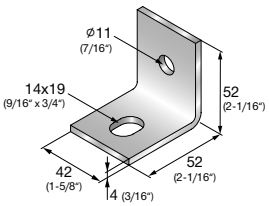

MT-B-T Base Material Connector 2-hole

Order Designation	Technical Data	Sales pack quantity	Item number	
MT-B-T	Dry indoor conditions (C1) Indoor with temporary condensation (C2)	20 pc	**2272090**	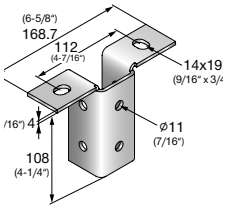

5

MT Open C-Channel Base Material Connectors

90° Connectors

MT-B-O2 Base Material Connector - 2 hole

Order Designation	Length	Thickness	Weight	Technical data	Sals pack quantity	Item number	
MT-B-O2	185 mm	4 mm	1027 g	Dry indoor conditions (C1) Indoor with temporary condensation (C2)	12 pc	**2272094**	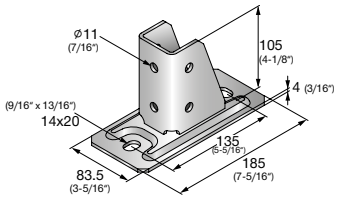

MT-B-O2B Base Material Connector - 2 hole

Order Designation	Length	Thickness	Weight	Technical data	Sals pack quantity	Item number	
MT-B-O2B	200 mm	8 mm	2072 g	Dry indoor conditions (C1) Indoor with temporary condensation (C2)	6 pc	**2282212**	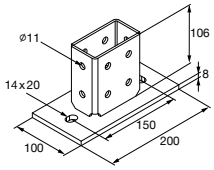

MT-B-O2B 60D Base Material Connector - Double Channel

Order Designation	Length	Thickness	Weight	Technical data	Sals pack quantity	Item number	
MT-B-O2B 60D	270 mm	8 mm	2572 g	Dry indoor conditions (C1) Indoor with temporary condensation (C2)	6 pc	**2358236**	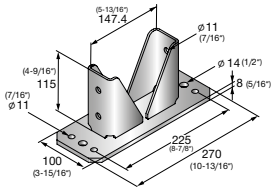

MT-B-O4 Base Material Connector - 4 hole

Order Designation	Length	Thickness	Weight	Technical data	Sals pack quantity	Item number	
MT-B-O4	200 mm	8 mm	3315 g	Dry indoor conditions (C1) Indoor with temporary condensation (C2)	4 pc	**2272098**	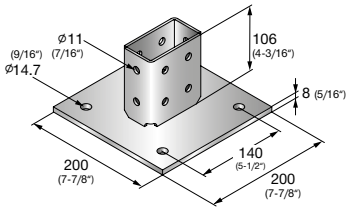

5

MT Open C-Channel Base Material Connectors

90° Connectors - Outdoor

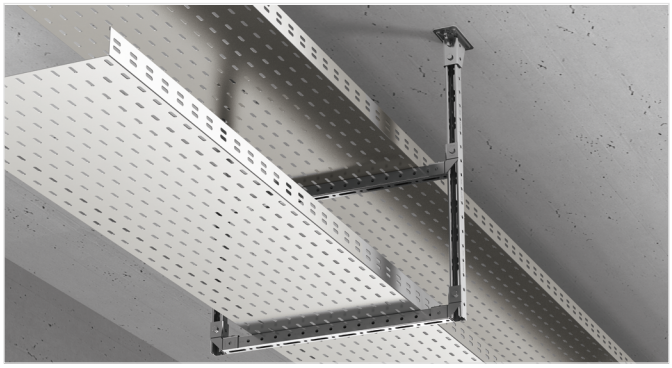

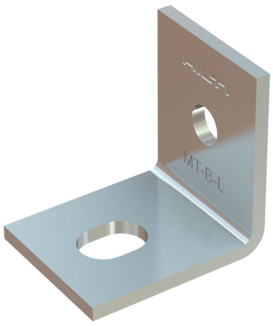

Applications

- Fastening MT C-Channel to concrete floors, walls or ceilings
- Fastening MT C-Channel to structural steel
- Anchoring metal framing and MEP support structures with extra-light loads to a base material

Advantages

- Part of the Hilti MT system – an economical, all-in-one solution for virtually all modular MEP support structures
- Easy to install – compatible with the Hilti MT Twist-Lock, a faster alternative to spring nuts for assembling a modular support system
- Adjustable – slotted anchor hole to simplify baseplate positioning and fastening

Technical data

Material composition	Q235 or better steel
Surface finish	Hot-dip galvanized - for outdoor use

MT-B-L OC Base Material Connector - 1-hole - Outdoor

Order Designation	Length	Thickness	Weight	Technical data	Sals pack quantity	Item number	
MT-B-L OC	52 mm	4 mm	119 g	Outdoor, low to moderate pollution (C3 / C4 - low)	20 pc	**2272088**	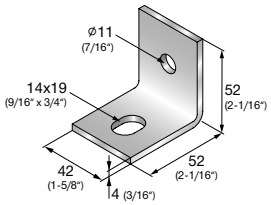

MT-B-T OC Base Material Connector - 2-hole - Outdoor

Order Designation	Length	Thickness	Weight	Technical data	Sals pack quantity	Item number	
MT-B-T OC	112 mm	2 mm	569 g	Outdoor, low to moderate pollution (C3 / C4 - low)	20 pc	**2272092**	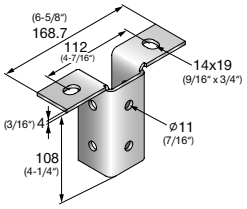

MT Open C-Channel Base Material Connectors

90° Connectors - Outdoor

5

MT-B-O2 OC Base Material Connector - 2-hole - Outdoor

Order Designation	Length	Thickness	Weight	Technical data	Sals pack quantity	Item number	
MT-B-O2 OC	185 mm	4 mm	1031 g	Outdoor, low to moderate pollution (C3 / C4 - low)	12 pc	**2272096**	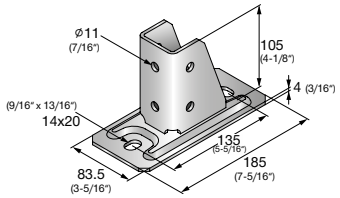

MT-B-O2B OC Base Material Connector - 2-hole - Outdoor

Order Designation	Length	Thickness	Weight	Technical data	Sals pack quantity	Item number	
MT-B-O2B OC	200 mm	8 mm	2072 g	Outdoor, low to moderate pollution (C3 / C4 - low)	6 pc	**2282213**	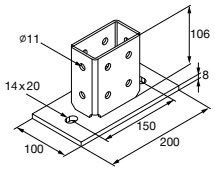

MT-B-O2B 60D OC Base Material Connector - Double Channel - Outdoor

Order Designation	Length	Thickness	Weight	Technical data	Sals pack quantity	Item number	
MT-B-O2B 60D OC	270 mm	8 mm	2572 g	Outdoor, low to moderate pollution (C3 / C4 - low)	6 pc	**2358237**	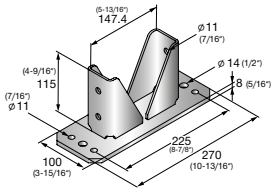

MT-B-O4 OC Base Material Connector - 4-hole - Outdoor

Order Designation	Length	Thickness	Weight	Technical data	Sals pack quantity	Item number	
MT-B-O4 OC	200 mm	8 mm	3315 g	Outdoor, low to moderate pollution (C3 / C4 - low)	4 pc	**2272099**	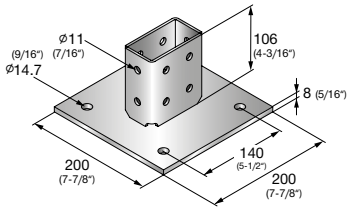

MT Fast-Lock Baseplates

with pre-assembled Fast-Lock nut and bolt for anchoring light-duty C-Channel structures to concrete or steel

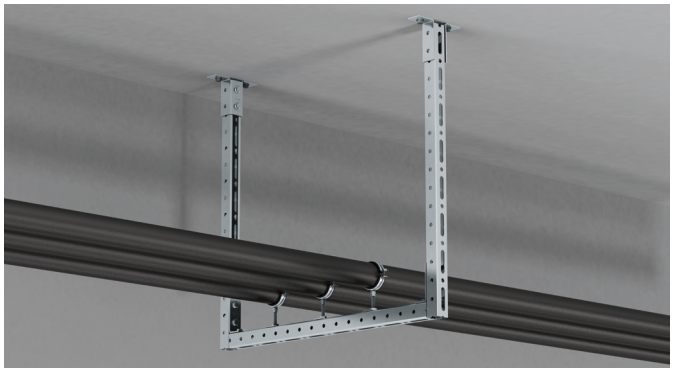

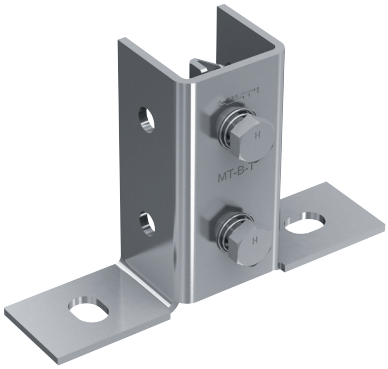

Applications

- Fastening MT C-Channel to concrete floors, walls or ceilings
- Fastening MT C-Channel to structural steel
- Anchoring metal framing and MEP support structures with medium loads to a base material
- Suitable for use in dry, indoor environments

Technical data

Material composition	DD11 MOD
Surface finish	Indoor-coated Electro-galvanized

Advantages

- Faster installations – pre-assembled with the Hilti MT Fast-Lock, our fastest method for assembling a modular support system with fewer steps
- Simplified stock management – pre-assembly greatly reduces the total number of MT components, for easier purchasing, handling, and storage
- Consistent installation quality – pre-assembly removes additional steps, helping reduce assembly errors for safer installations
- Adjustable – slotted anchor hole to simplify baseplate positioning and fastening
- Part of the Hilti MT system – an economical, all-in-one solution for virtually all modular MEP support structures
- Extensive software support - PROFIS Modular Support Engineering, BIMCAD content, and Revit® families are all available to streamline design and ordering

MT-B-T FL Pre-assembled Base Plate

Order Designation	Material composition	Technical data	Sales pack quantity	Item number	
MT-B-T FL	S235JR, Q235B	Dry indoor conditions (C1) Indoor with temporary condensation (C2)	16 pc	**2399639**	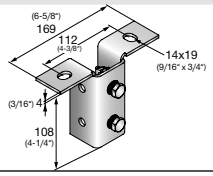

MT-B-O2 FL Pre-assembled Base Plate

Order Designation	Material composition	Technical data	Sales pack quantity	Item number	
MT-B-O2 FL	S235JR, Q235B	Dry indoor conditions (C1) Indoor with temporary condensation (C2)	16 pc	**2399660**	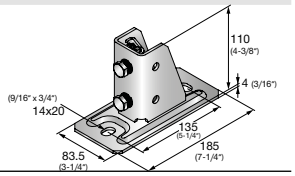

MT-B-L FL Pre-assembled Base Plate

Order Designation	Material composition	Technical data	Sales pack quantity	Item number	
MT-B-L FL	S235JR, Q235B	Dry indoor conditions (C1) Indoor with temporary condensation (C2)	18 pc	**2399665**	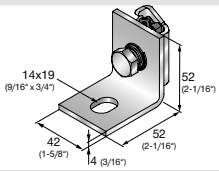

5

MT Fast-Lock Baseplates - Outdoors

Base Connector with pre-assembled Fast-Lock nut and bolt for anchoring light-duty C-Channel structures to concrete or steel, for outdoor use with low pollution

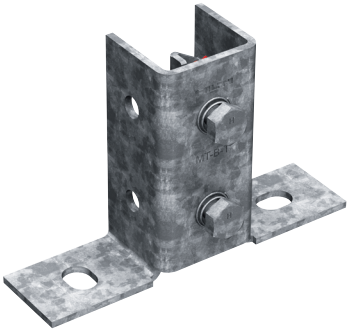

Applications

- Fastening MT C-Channel to concrete floors, walls or ceilings
- Fastening MT C-Channel to structural steel
- Anchoring metal framing and MEP support structures with medium loads to a base material
- Suitable for use in moderately corrosive environments

Technical data

Material composition	DD11 MOD
Surface finish	Hot Dip Galvanized

Advantages

- Faster installations – pre-assembled with the Hilti MT Fast-Lock, our fastest method for assembling a modular support system with fewer steps
- Simplified stock management – pre-assembly greatly reduces the total number of MT components, for easier purchasing, handling, and storage
- Consistent installation quality – pre-assembly removes additional steps, helping reduce assembly errors for safer installations
- Adjustable – slotted anchor hole to simplify baseplate positioning and fastening
- Part of the Hilti MT system – an economical, all-in-one solution for virtually all modular MEP support structures
- Extensive software support - PROFIS Modular Support Engineering, BIMCAD content, and Revit® families are all available to streamline design and ordering

MT-B-T FL OC Pre-assembled Base Plate - Outdoors

Order Designation	Material composition	Technical data	Sales pack quantity	Item number	
MT-B-T FL OC	S235JR, Q235B	Outdoor, low to moderate pollution (C3 / C4 - low)	16 pc	**2399674**	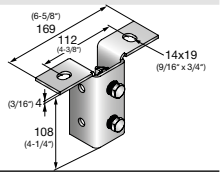

MT-B-O2 FL OC Pre-assembled Base Plate - Outdoors

Order Designation	Material composition	Technical data	Sales pack quantity	Item number	
MT-B-O2 FL OC	S235JR, Q235B	Outdoor, low to moderate pollution (C3 / C4 - low)	16 pc	**2399675**	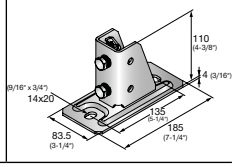

MT-B-L FL OC Pre-assembled Base Plate - Outdoors

Order Designation	Material composition	Technical data	Sales pack quantity	Item number	
MT-B-L FL OC	S235JR, Q235B	Outdoor, low to moderate pollution (C3 / C4 - low)	18 pc	**2399677**	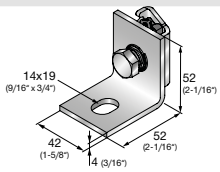

MT Open C-Channel Base Material Connectors

90° Connectors

5

Technical data Base Material Connectors

Item image	Load drawing	Order Designation	+ Fz	- Fz	± Fx	± Fy
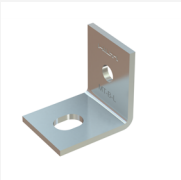	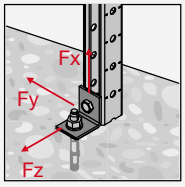	**MT-B-L / MT-B-L OC**	5,0 kN	2,1 kN	2,1 kN	0,0 kN
	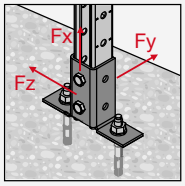	**MT-B-T / MT-B-T OC**	0,6 kN	0,6 kN	6,0 kN	1,2 kN
	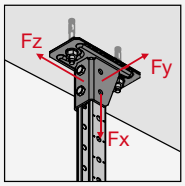	**MT-B-O2 / MT-B-O2 OC**	5,2 kN	5,2 kN	9,0 kN	1,7 kN
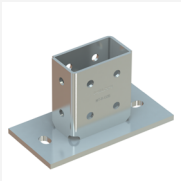	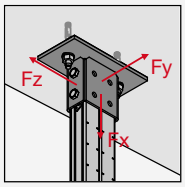	**MT-B-O2B / MT-B-O2B OC**	19,2 kN	19,2 kN	12,6 kN	3,6 kN
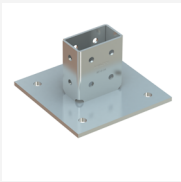	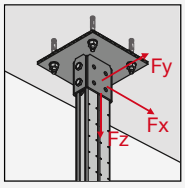	**MT-B-O4B / MT-B-O4B OC**	19,2 kN	19,2 kN	12,6 kN	3,6 kN
	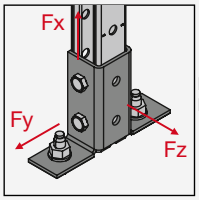	**MT-B-T FL/ MT-B-T FL OC**	0,6 kN	0,6 kN	6,0 kN	1,2 kN
	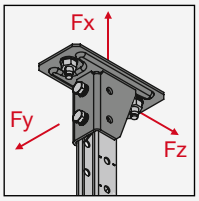	**MT-B-O2 FL / MT-B-O2 FL OC**	5,2 kN	5,2 kN	9,0 kN	1,7 kN
	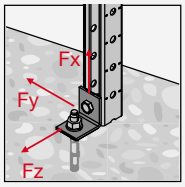	**MT-B-L FL/ MT-B-L FL OC**	5,0 kN	2,1 kN	2,1 kN	0,0 kN

Design notes
- Shown load values are recommended values with partial safety factors for actions and resistance included
- Design value = 1.4 * recommended value
- The design resistance of the products is defined in accordance with EN1993

MT Open C-Channel Base Material Connectors

90° Connectors

5

Operation Instruction

MT-B-L / MT-B-L OC

2288351-04.2020

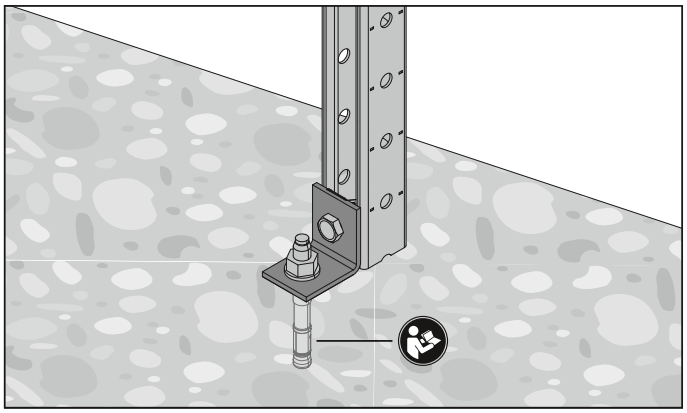

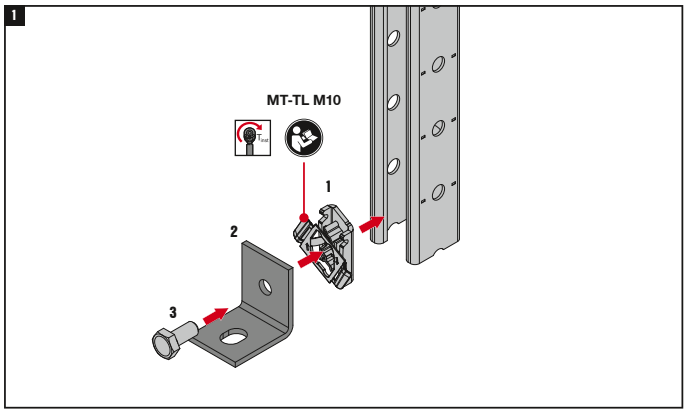

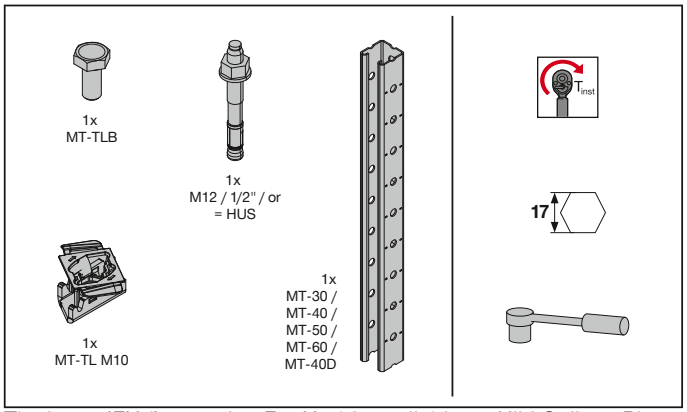

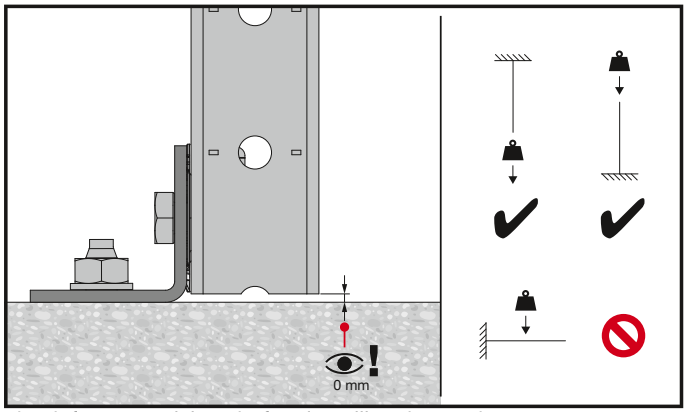

The latest IFU (Instruction For Use) is available on Hilti Online. Please check for any revisions before installing the product.

MT-B-T / MT-B-T OC

2288352-06.2020

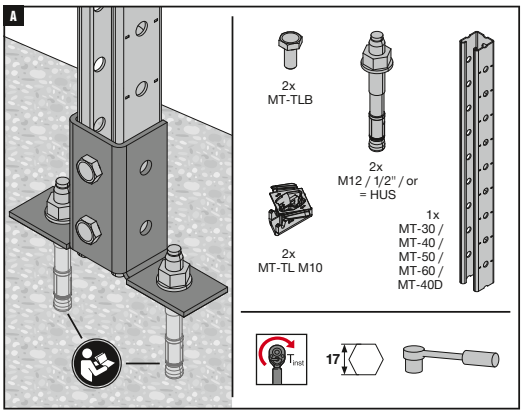

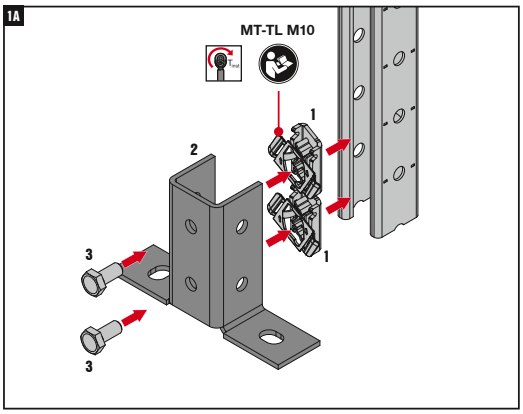

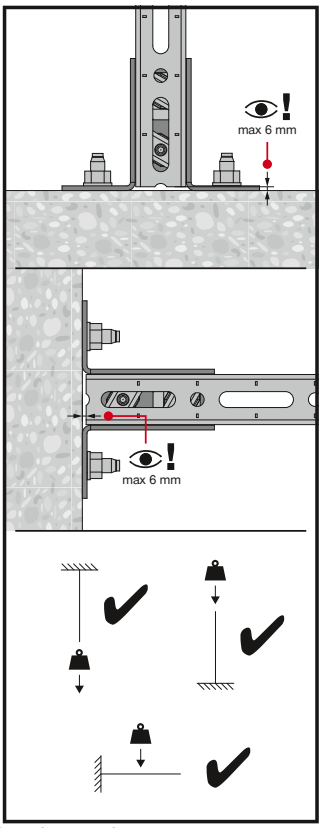

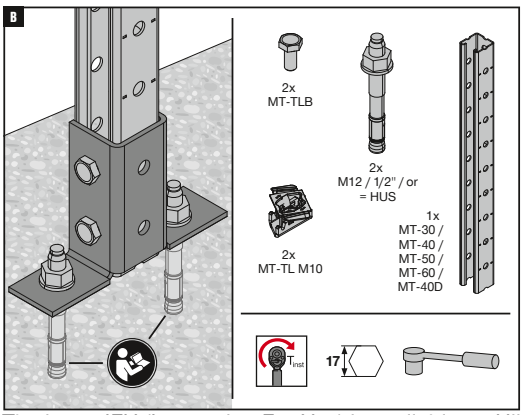

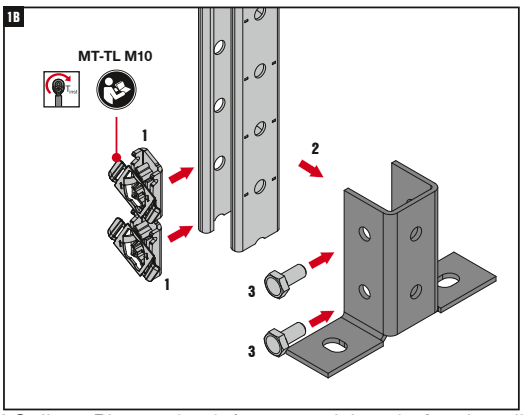

The latest IFU (Instruction For Use) is available on Hilti Online. Please check for any revisions before installing the product.

MT Open C-Channel Base Material Connectors

90° Connectors

5

Operation Instruction

MT-B-02 / MT-B-02 OC

2288353-09.2020

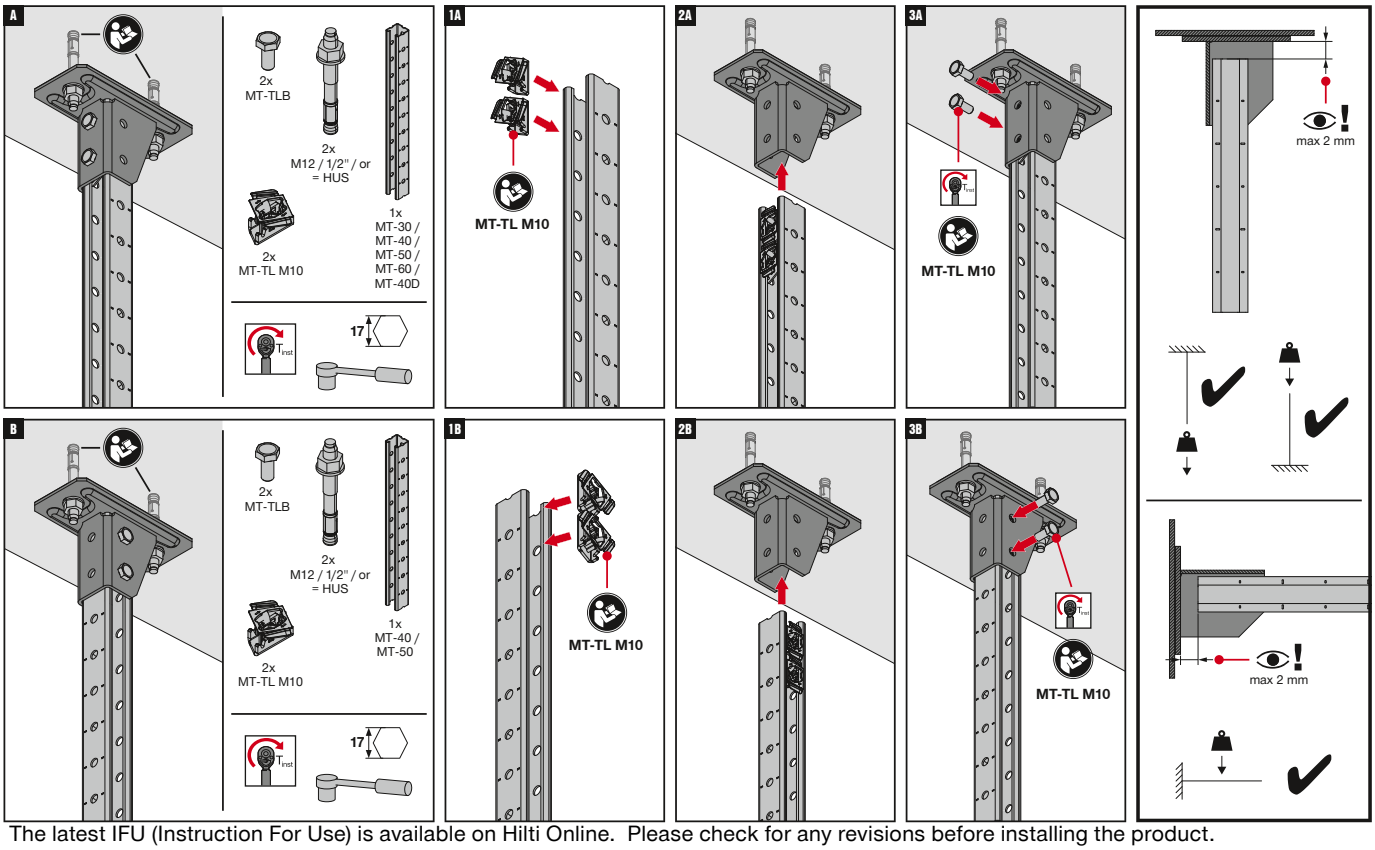

The latest IFU (Instruction For Use) is available on Hilti Online. Please check for any revisions before installing the product.

MT-B-02B / MT-B-02B OC

2288354-09.2020

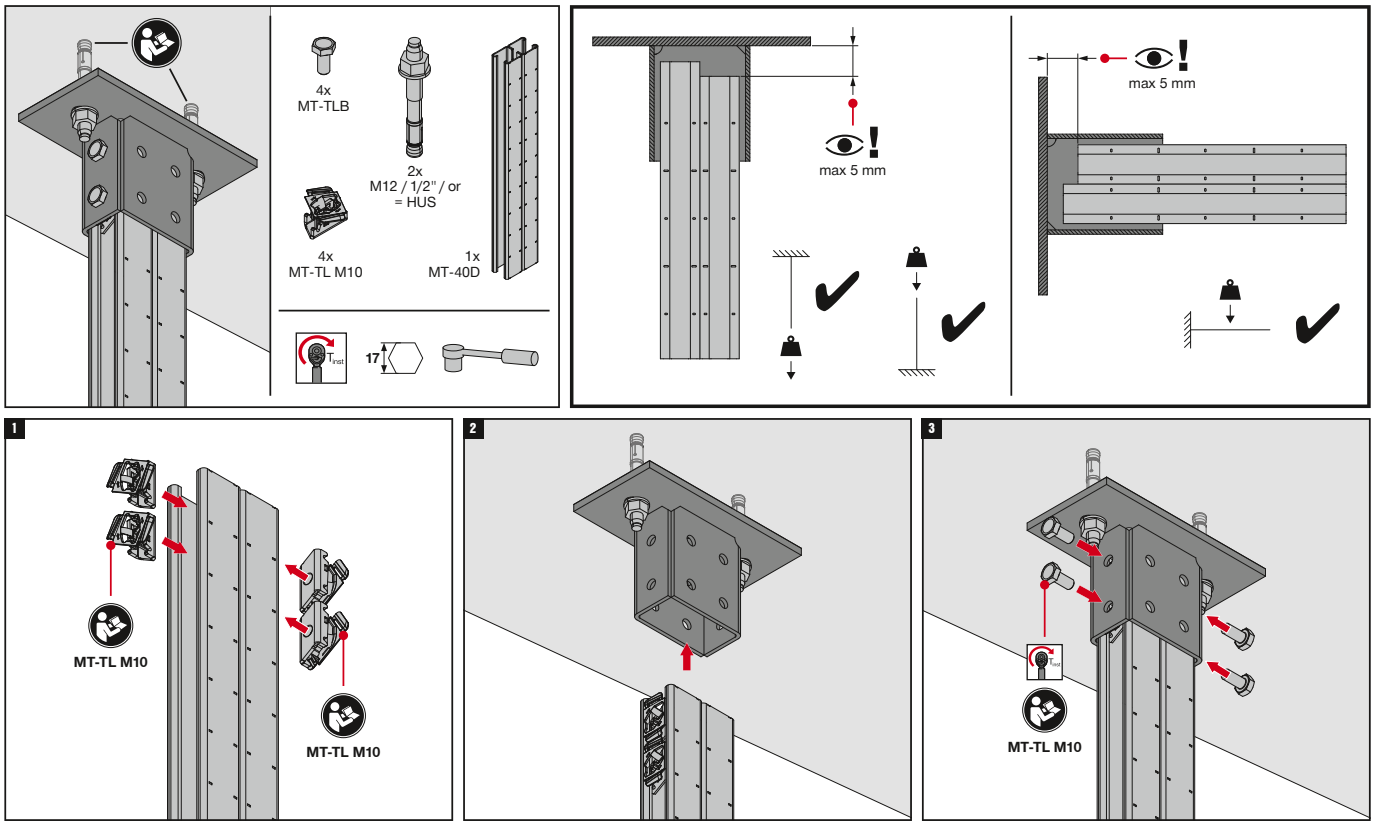

The latest IFU (Instruction For Use) is available on Hilti Online. Please check for any revisions before installing the product.

5

MT Open C-Channel Base Material Connectors

90° Connectors

Operation Instruction

MT-B-04 / MT-B-04 OC

2288355-09.2020

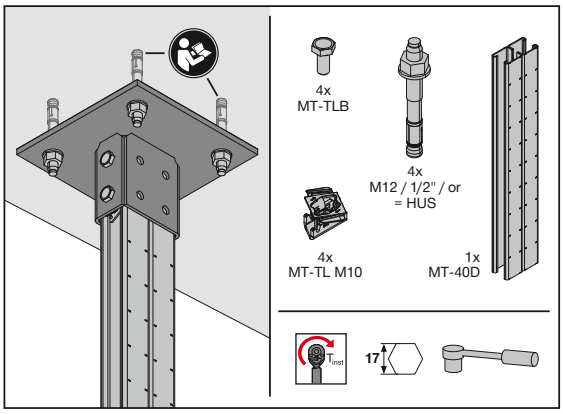

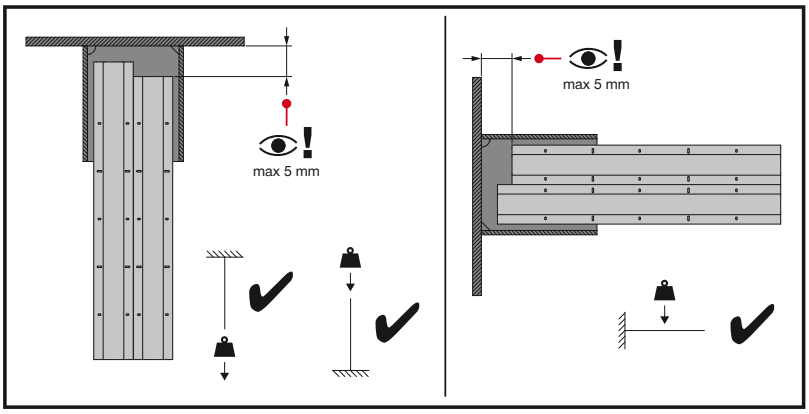

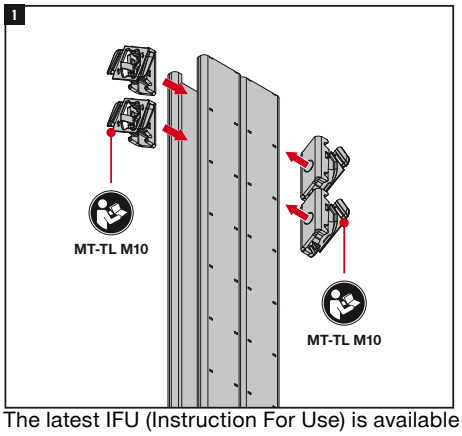

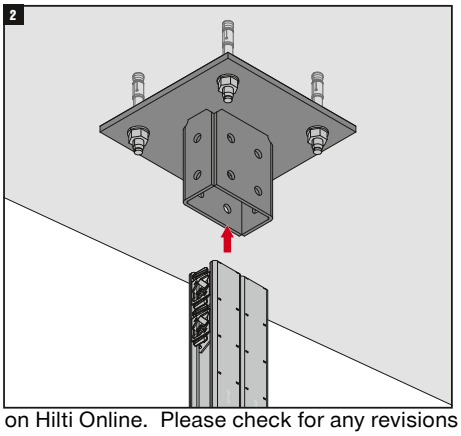

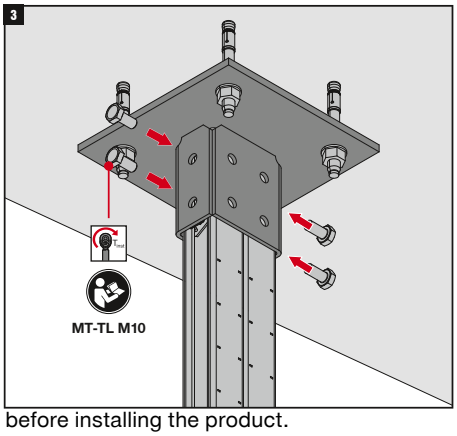

The latest IFU (Instruction For Use) is available on Hilti Online. Please check for any revisions before installing the product.

5

MT Open C-Channel Base Material Connectors
Angle Brace

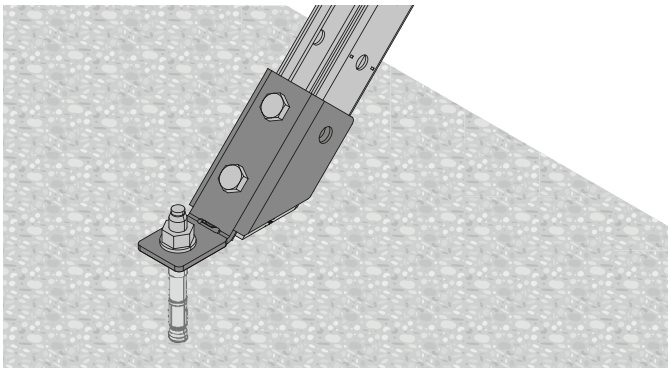

Applications

- Anchoring MT-40 or MT-50 C-Channels to concrete at a 45-degree angle for use as lateral bracing
- Lateral bracing of lightweight metal framing and MEP support structures
- Suitable for use in dry, indoor environments

Advantages

- Part of the Hilti MT system – an economical, all-in-one solution for virtually all modular MEP support structures
- Easy to install – compatible with the Hilti MT Twist-Lock, a faster alternative to spring nuts for assembling a modular support system
- Part of a complete Hilti solution – compatible with our direct fastening and anchoring solutions

Technical data

Material composition	Q235 or better steel
Surface finish	Pre-galvanized - for dry indoor use only

MT-AB-L 45 Angle Brace

Order Designation	Thickness	Weight	Technical data	Sales pack quantity	Item number	
MT-AB-L 45	4 mm	427 g	Dry indoor conditions (C1) Indoor with temporary condensation (C2)	10 pc	**2272113**	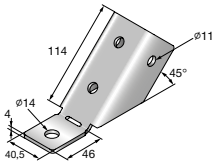

MT-AB-LL2 45 Angle Brace

Order Designation	Thickness	Weight	Technical data	Sales pack quantity	Item number	
MT-AB-LL2 45	4 mm	553 g	Dry indoor conditions (C1) Indoor with temporary condensation (C2)	10 pc	**2272115**	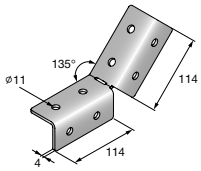

MT-AB set Angle Brace adjustable

Order Designation	Thickness	Weight	Technical data	Sales pack quantity	Item number	
MT-AB A set	4 mm	441 g	Dry indoor conditions (C1) Indoor with temporary condensation (C2)	12 pc	**2346395**	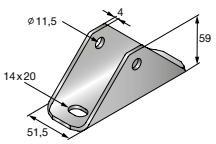

MT Open C-Channel Base Material Connectors

Channel Clamp

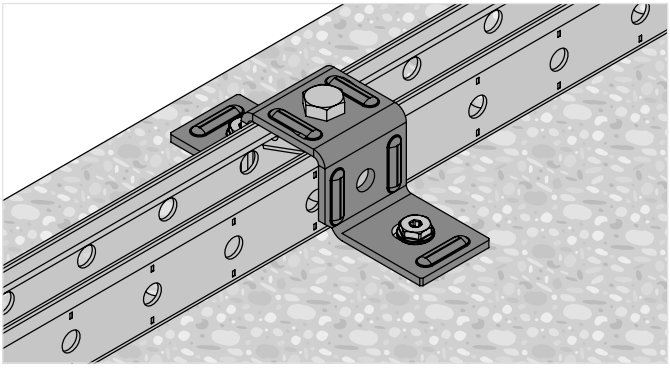

Applications

- Cross-connection of one C-Channel to concrete
- Suitable for use in dry, indoor environments

Advantages

- Compatible with MT Twist-Lock and MT Thread Forming Bolt Channel connectors – for much faster, adaptable assembly
- Universal – complete many different applications using few parts
- Twist-lock and Thread Forming Bolt Channel connector takes up shear and tensile loads

Technical data

Material composition	Q235 or better steel
Surface finish	Indoor Coated - Electro galvanized

MT-CC-BC 40/50 Base Material Connector - Channel Clamp

Order Designation	Thickness	Weight	Technical data	Sales pack quantity	Item number	
MT-CC-BC 40/50	4 mm	326 g	Dry indoor conditions (C1) Indoor with temporary condensation (C2)	20 pc	**2322432**	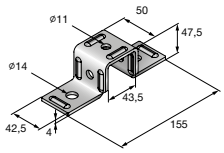

MT-CC-BS 40/50 Base Material Connector - Channel Clamp

Order Designation	Thickness	Weight	Technical data	Sales pack quantity	Item number	
MT-CC-BS 40/50	4 mm	326 g	Dry indoor conditions (C1) Indoor with temporary condensation (C2)	20 pc	**2322402**	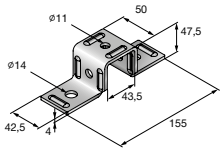

5

MT Open C-Channel Base Material Connectors

Angle Brace - Outdoor

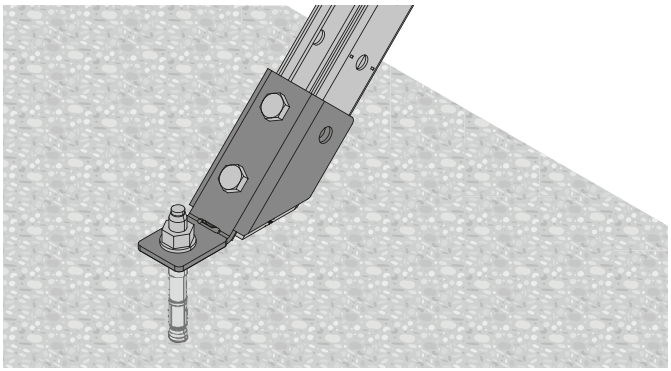

Applications

- Anchoring MT-40 or MT-50 C-Channels to concrete at a 45-degree angle for use as lateral bracing
- Lateral bracing of lightweight metal framing and MEP support structures
- Suitable for use in moderately corrosive environments

Advantages

- Part of the Hilti MT system – an economical, all-in-one solution for virtually all modular MEP support structures
- Easy to install – compatible with the Hilti MT Twist-Lock, a faster alternative to spring nuts for assembling a modular support system
- Part of a complete Hilti solution – compatible with our direct fastening and anchoring solutions

Technical data

Material composition	Q235 or better steel
Surface finish	Outdoor Coated - HDG

MT-AB-L 45 OC Angle Brace - Outdoor

Order Designation	Thickness	Weight	Technical data	Sales pack quantity	Item number	
MT-AB-L 45 OC	4 mm	427 g	Outdoor, low to moderate pollution (C3 / C4 - low)	10 pc	**2272114**	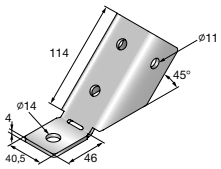

MT-AB-LL2 45 OC Angle Brace - Outdoor

Order Designation	Thickness	Weight	Technical data	Sales pack quantity	Item number	
MT-AB-LL2 45 OC	4 mm	553 g	Outdoor, low to moderate pollution (C3 / C4 - low)	10 pc	**2273585**	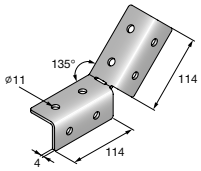

MT-AB A OC Angle Brace Adjustable - Outdoor

Order Designation	Thickness	Weight	Technical data	Sales pack quantity	Item number	
MT-AB A OC set	4 mm	44 g	Outdoor, low to moderate pollution (C3 / C4 - low)	12 pc	**2346396**	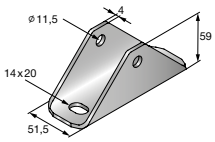

MT Open C-Channel Base Material Connectors

Channel Clamp - Outdoor

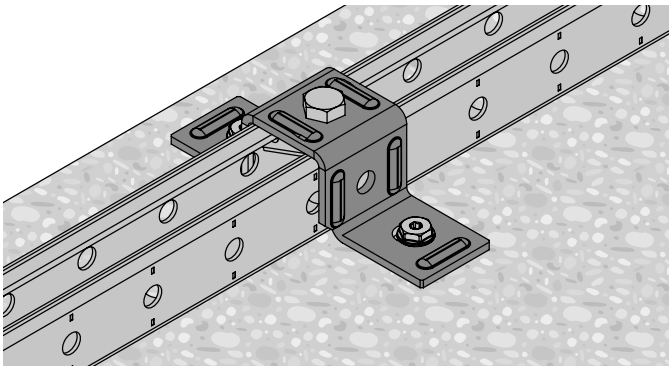

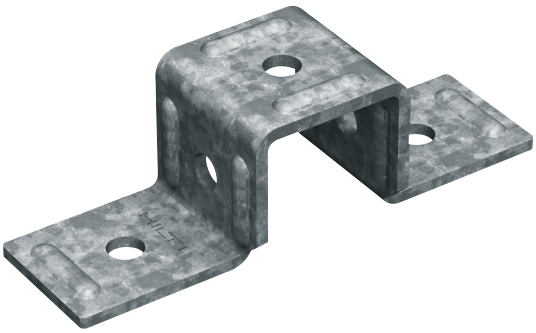

Applications

- Cross-connection of one C-girder to another Channel or girder
- Suitable for use in moderately corrosive environments

Advantages

- Compatible with MT Twist-Lock and MT Thread Forming Bolt Channel connectors – for much faster, adaptable assembly
- Universal – complete many different applications using few parts
- Twist-lock and Thread Forming Bolt Channel connector takes up shear and tensile loads

Technical data

Material composition	Q235 or better steel
Surface finish	Outdoor Coated - HDG

MT-CC-BC 40/50 OC Base Material Connector - Channel Clamp - Outdoor

Order Designation	Thickness	Weight	Technical data	Sales pack quantity	Item number	
MT-CC-BC 40/50 OC	4 mm	326 g	Outdoor, low to moderate pollution (C3 / C4 - low)	20 pc	**2322401**	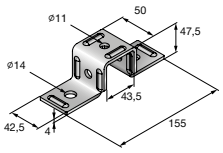

MT-CC-BS 40/50 OC Base Material Connector - Channel Clamp - Outdoor

Order Designation	Thickness	Weight	Technical data	Sales pack quantity	Item number	
MT-CC-BS 40/50 OC	4 mm	326 g	Outdoor, low to moderate pollution (C3 / C4 - low)	20 pc	**2322403**	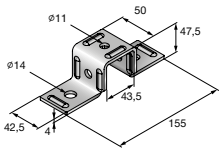

5

MT Open C-Channel Base Material Connectors

Channel Clamp - Outdoor

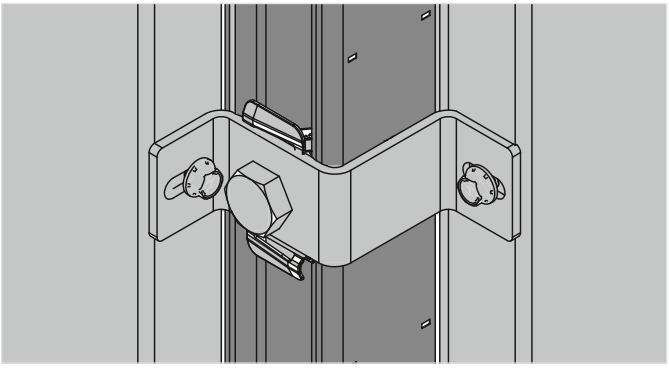

Applications

- Attaching polypanels to a substructure of MT strut/box profile
- Hot/cold aisle containment in data centers

Advantages

- Helps lower installation cost – this new solution uses fewer and simpler components than previous Hilti panel connectors, saving you upfront costs and time on-site
- Compatible with MT Thread Forming Bolt Channel connectors – for much faster, adaptable assembly with higher pull-out and shear resistance
- Corrosion resistance – hot-dip galvanized to help protect against moisture and chemical corrosion

Technical data

Material composition	Q235 or better steel
Surface finish	Outdoor Coated - HDG

MT-CC-40/50 C OC Channel Clamp - Outdoor

Order Designation	Height	Technical data	Sales pack quantity	Item number	
MT-CC-40/50 C OC	3 mm	Outdoor, low to moderate pollution (C3 / C4 - low)	8 pc	**2353779**	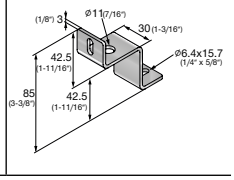

MT-CC-40/50 M OC Channel Clamp - Outdoor

Order Designation	Height	Technical data	Sales pack quantity	Item number	
MT-CC-40/50 M OC	3 mm	Outdoor, low to moderate pollution (C3 / C4 - low)	16 pc	**2353800**	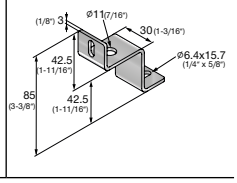

5

MT Open C-Channel Base Material Connectors
Angle Brace, Channel Clamp

Technical data Angle Brace

Item image	Load drawing	Order Designation	+ Fz	- Fz	± Fx	± Fy
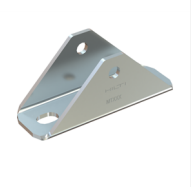	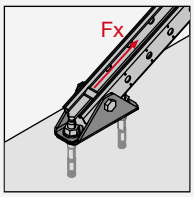	**MT-AB A / MT-AB A OC**	-	-	9,9 kN	-
	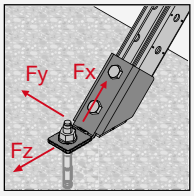	**MT-AB-L 45 / MT-AB-L 45 OC**	-	-	3,8 kN	-

Design notes
- Shown load values are recommended values with partial safety factors for actions and resistance included
- Design value = 1.4 * recommended value
- The design resistance of the products is defined in accordance with EN1993

Technical data Channel Clamp

Item image	Load drawing	Order Designation	+ Fx	- Fx	+ Fy	- Fy	+ Fz	- Fz
	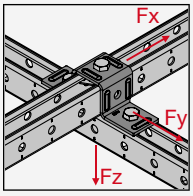	**MT-CC-40/50 / MT-CC-40/50 OC**	2,50 kN	2,50 kN	5,71 kN	5,71 kN	--	5,36 kN

Design notes
- Shown load values are recommended values with partial safety factors for actions and resistance included
- Design value = 1.4 * recommended value
- The design resistance of the products is defined in accordance with EN1993

5

MT Open C-Channel Base Material Connectors

Angle Brace

Operation Instruction

MT-AB-L 45 / MT-AB-L 45 OC

2294695-07.2020

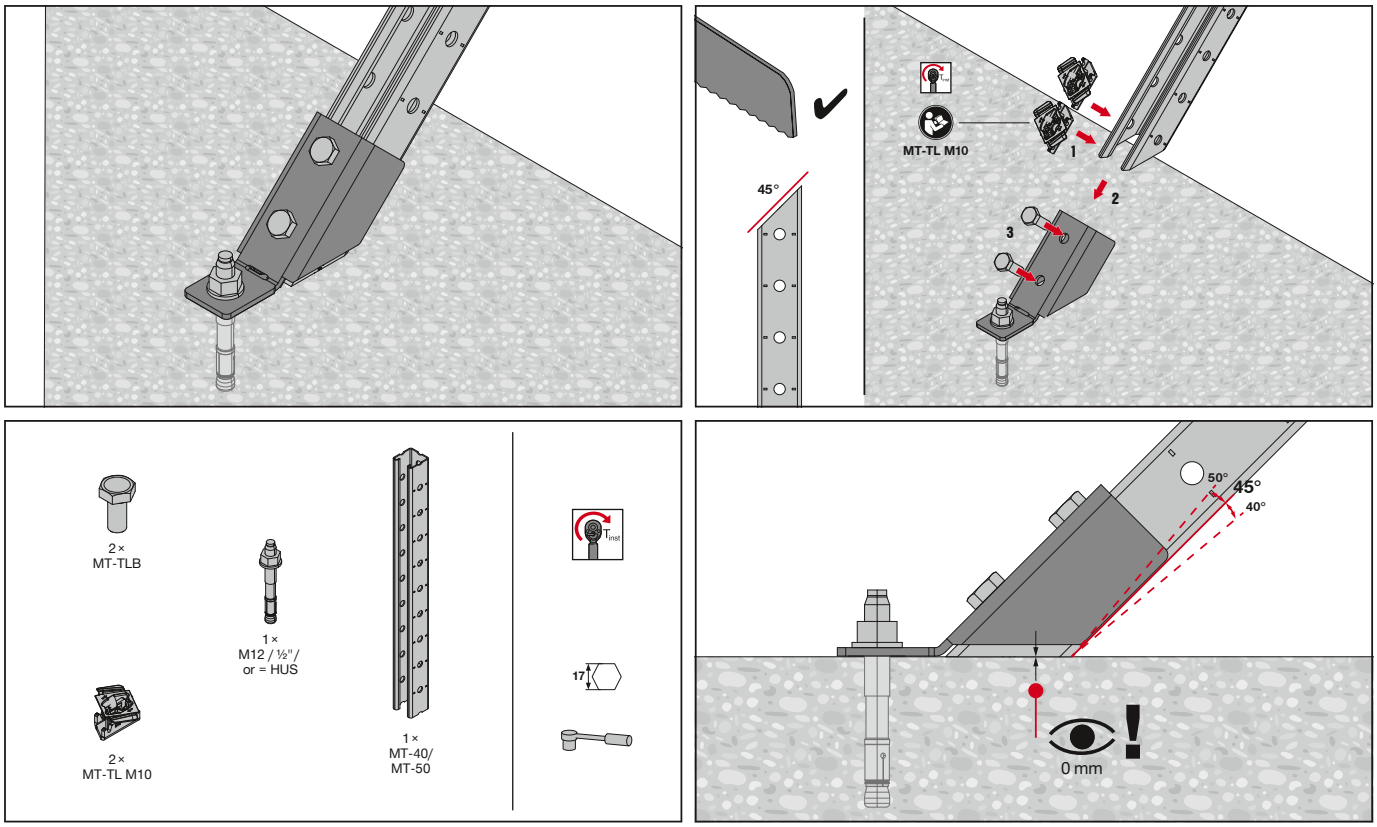

The latest IFU (Instruction For Use) is available on Hilti Online. Please check for any revisions before installing the product.

MT-AB-LL2 45 / MT-AB-LL2 45 OC

2294696-07.2020

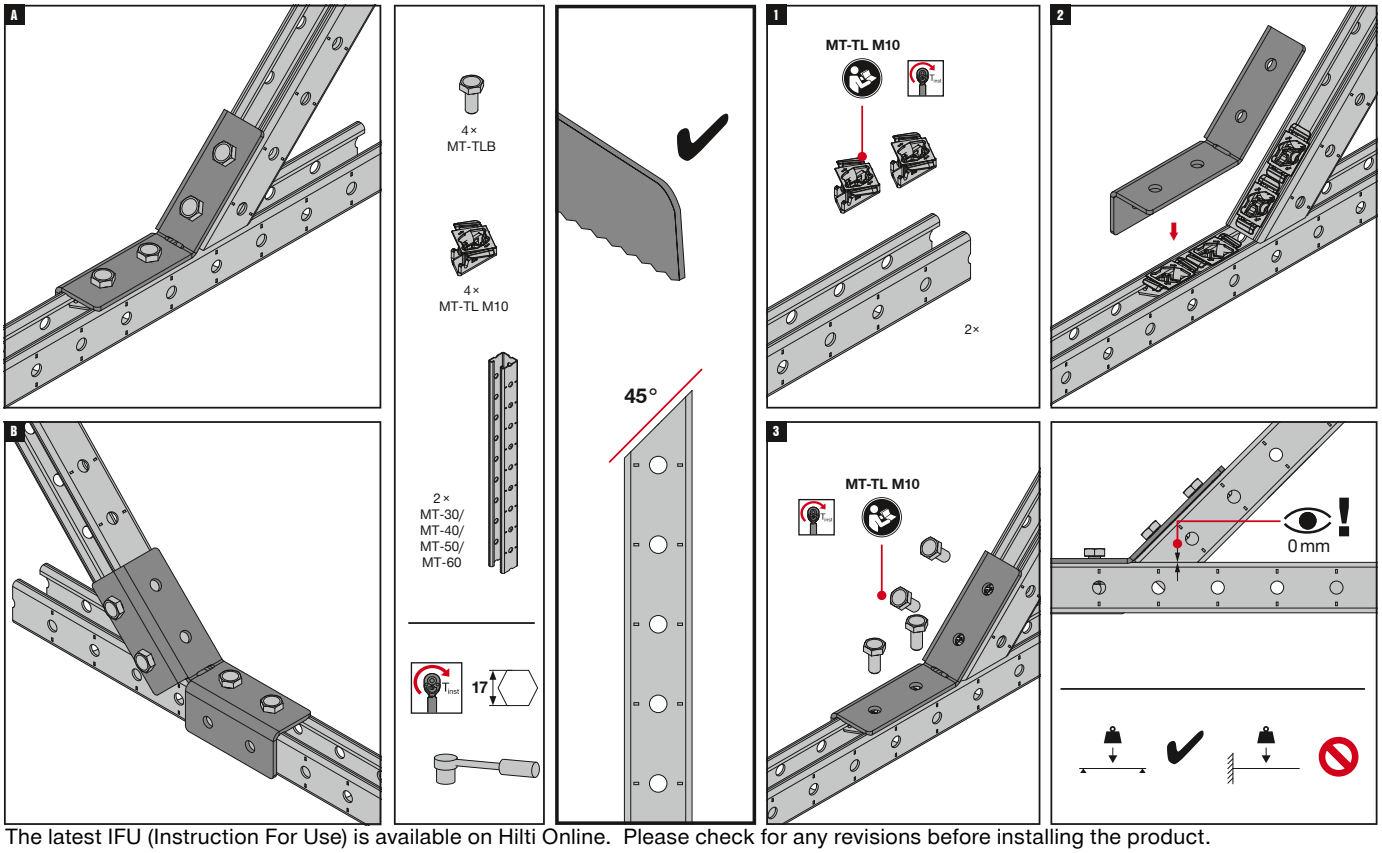

The latest IFU (Instruction For Use) is available on Hilti Online. Please check for any revisions before installing the product.

5

MT Open C-Channel Base Material Connectors

Angle Brace, Channel Clamp

Operation Instruction

MT-AB-A / MT-AB-A OC

2294694-07.2020

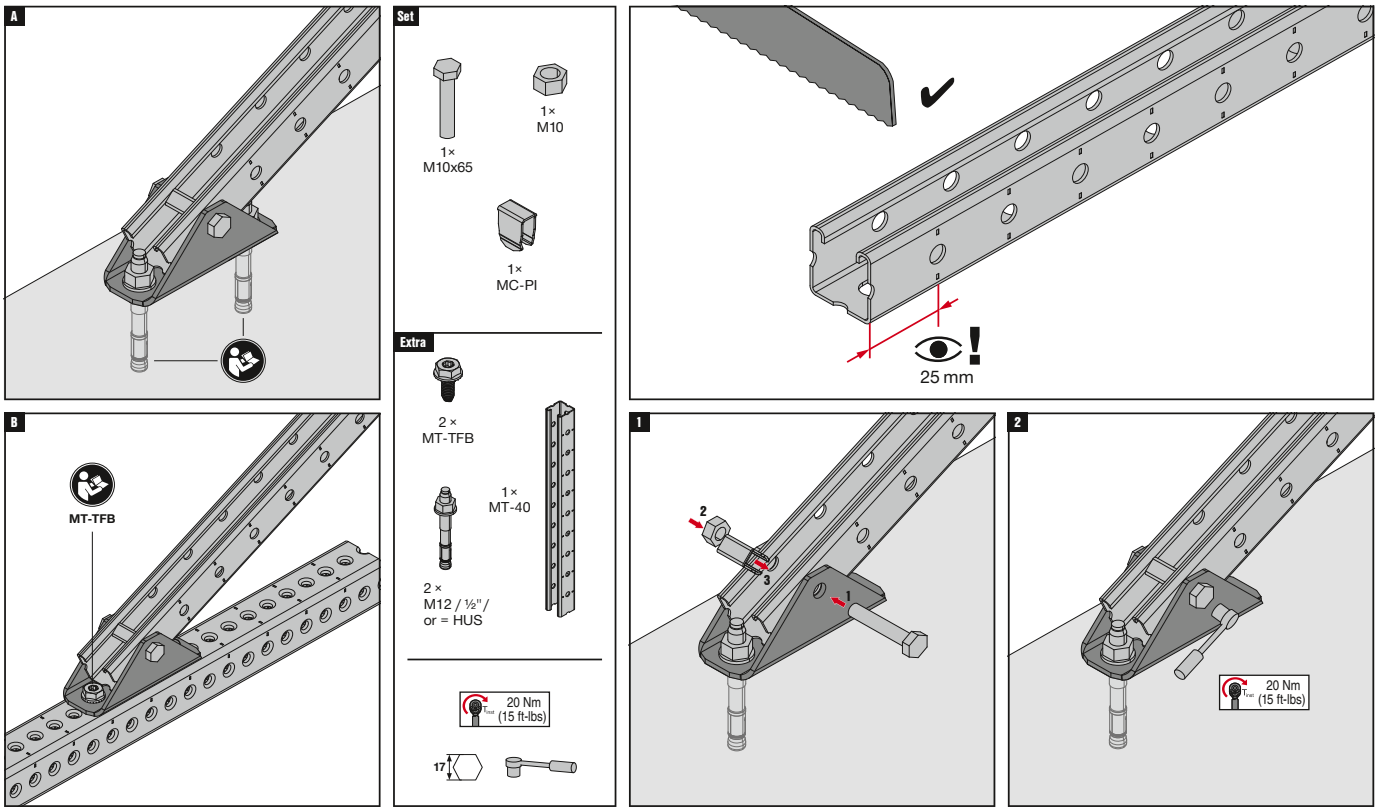

The latest IFU (Instruction For Use) is available on Hilti Online. Please check for any revisions before installing the product.

Operation Instruction

MT-CC-BC 40/50 / MT-CC-BS 40/50 / MT-CC-BC 40/50 OC / MT-CC-BS 40/50 OC

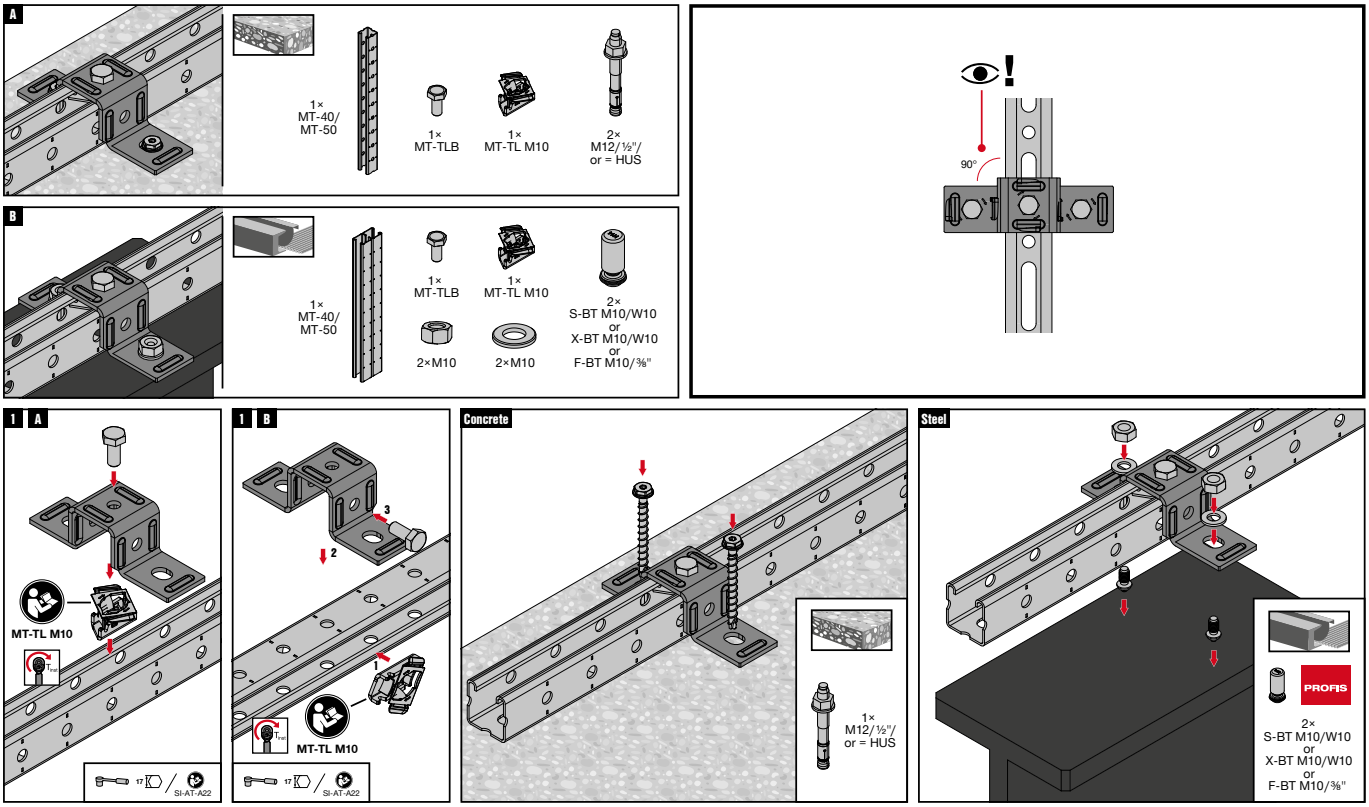

The latest IFU (Instruction For Use) is available on Hilti Online. Please check for any revisions before installing the product.

5

MT Open C-Channel Base Material Connectors

Channel Clamp

Operation Instruction

MT-CC-40/50 C OC

2359994-04.2022

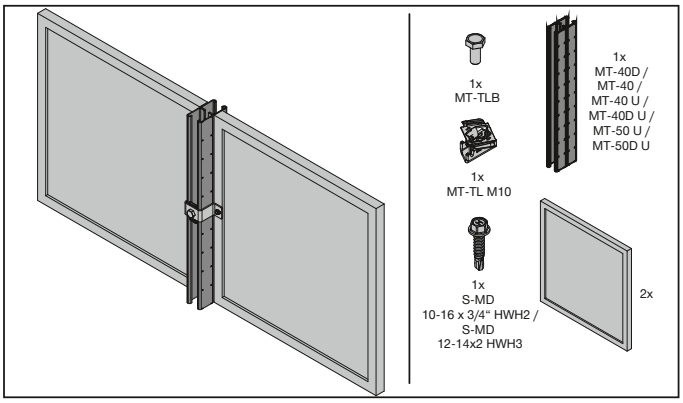

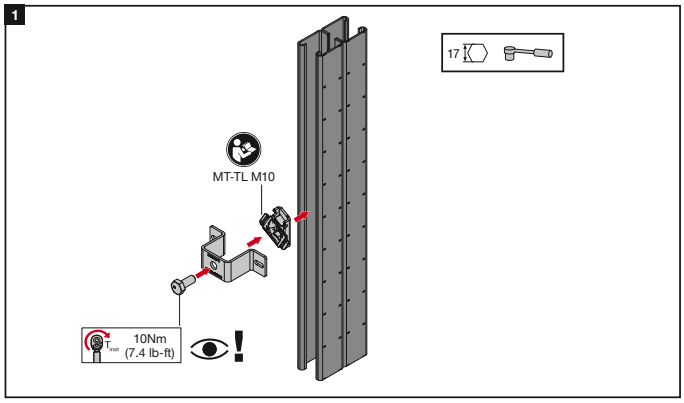

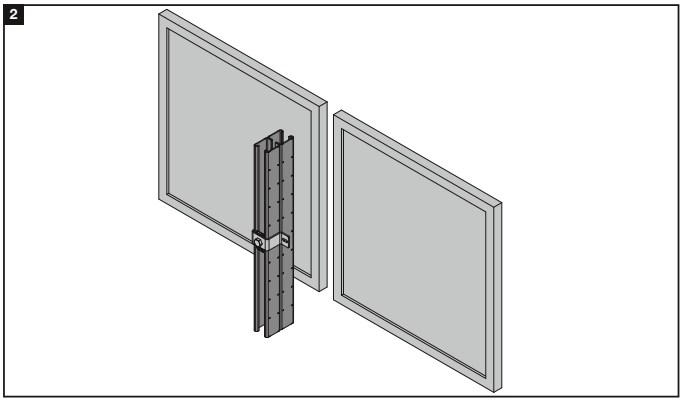

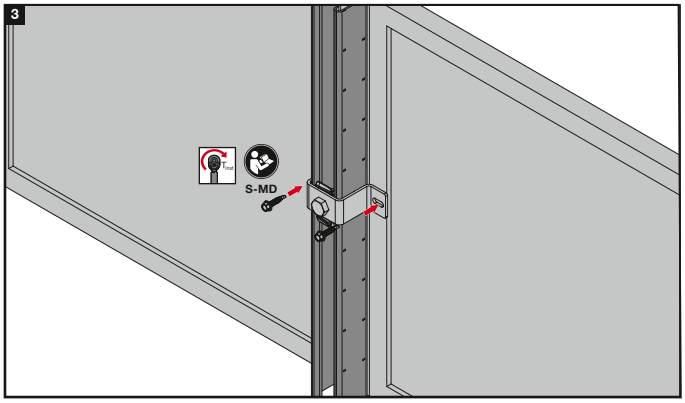

The latest IFU (Instruction For Use) is available on Hilti Online. Please check for any revisions before installing the product.

MT-CC-40/50 M OC

2359995-04.2022

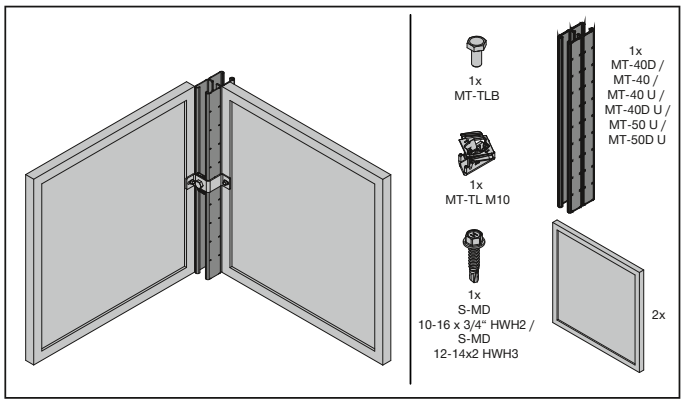

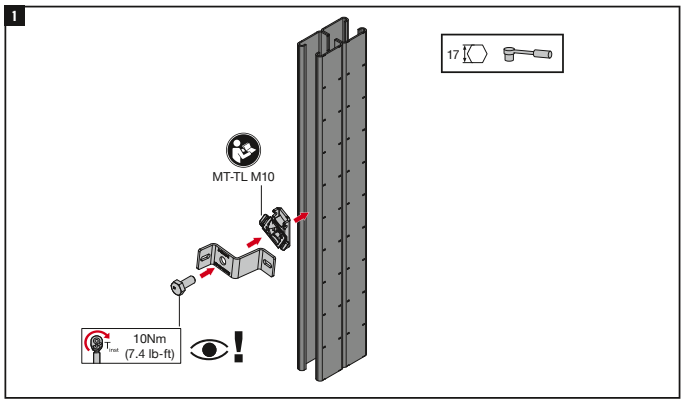

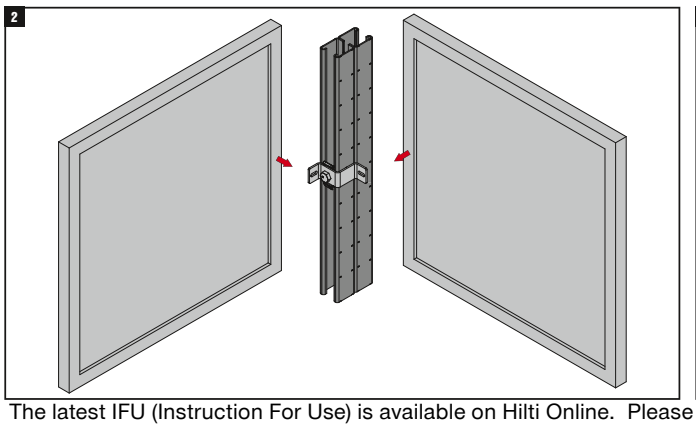

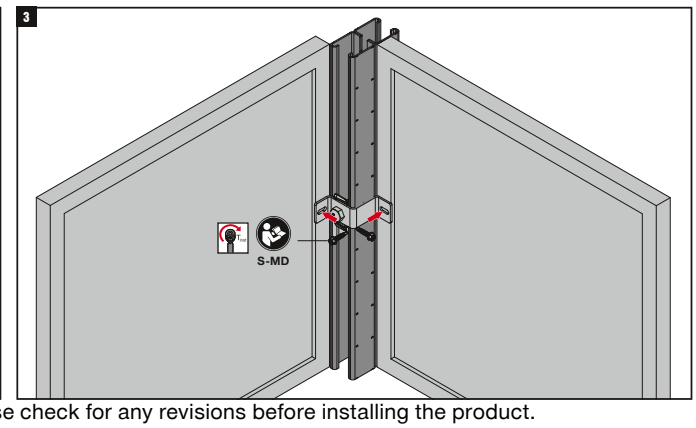

The latest IFU (Instruction For Use) is available on Hilti Online. Please check for any revisions before installing the product.

5

MT Box Profiles Baseplates
90° Connectors - Outdoor

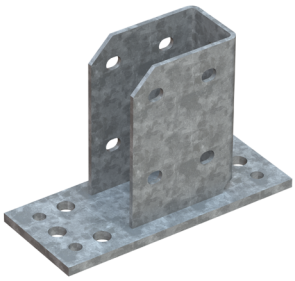

Applications

- Fastening MT-70 and MT-80 box profiles to concrete floors, walls or ceilings
- Fastening MT-70 and MT-80 box profiles to structural steel
- Anchoring metal framing and MEP support structures with light loads to a base material

Advantages

- Part of the Hilti MT system – an economical, all-in-one solution for virtually all modular MEP support structures
- Easy to install – one-step assembly using Hilti MT-TFB thread-forming bolts
- Adaptable – unlike welding, modular metal framing can be modified for future MEP requirements

Technical data

Material composition	Q235 or better steel
Surface finish	Outdoor Coated - HDG

MT-B-GS T OC Base Material Connector - Outdoor

Order Designation	Weight	Technical data	Sales pack quantity	Item number	
MT-B-GS T OC	2166 g	Outdoor, low to moderate pollution (C3 / C4 - low)	2 pc	**2272100**	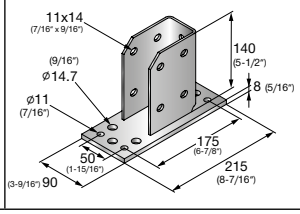

MT-B-GS O4U OC Base Material Connector 4-hole - Outdoor

Order Designation	Weight	Technical data	Sales pack quantity	Item number	
MT-B-GS O4U OC	4730 g	Outdoor, low to moderate pollution (C3 / C4 - low)	4 pc	**2272101**	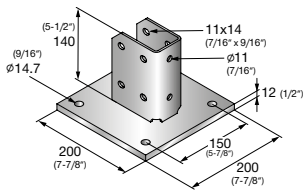

5

MT Box Profiles Baseplates

90° Connectors - Outdoor

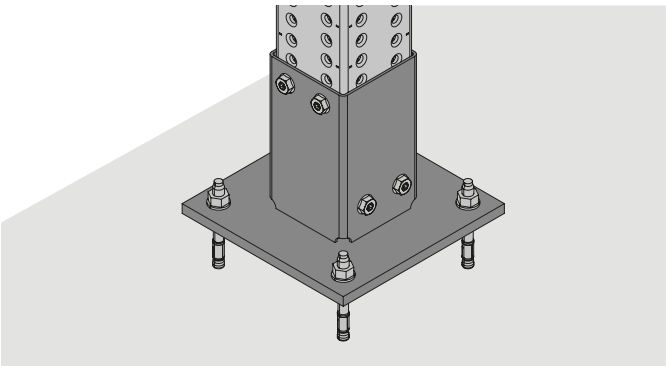

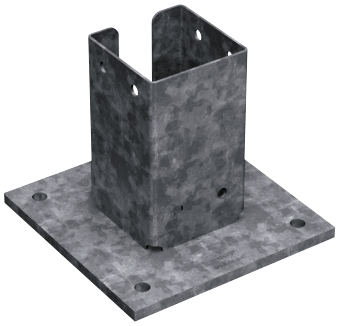

Applications

- Fastening MT-90 box profiles to concrete floors, walls or ceilings
- Anchoring metal framing and MEP support structures with heavy loads to a base material
- Suitable for outdoor environments with low to moderate pollution (C3)

Advantages

- Part of the Hilti MT system – an economical, all-in-one solution for virtually all modular MEP support structures
- Easy to install – one-step assembly using Hilti MT-TFB thread-forming bolts
- Adaptable – unlike welding, modular post bases allow you to modify metal framing for future MEP requirements

Technical data

Material composition	Q235 or better steel
Surface finish	Outdoor Coated - HDG

MT-B-GL O4C OC Base Material Connector - Outdoor

Order Designation	Weight	Technical Data	Sales pack quantity	Item number	
MT-B-GL O4C OC	6825g	Outdoor, low to moderate pollution (C3 / C4 - low)	2 pc	**2343282**	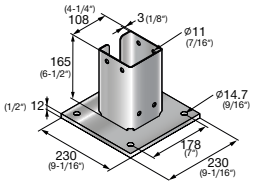

MT Box Profiles Baseplates

90° Connectors - Outdoor

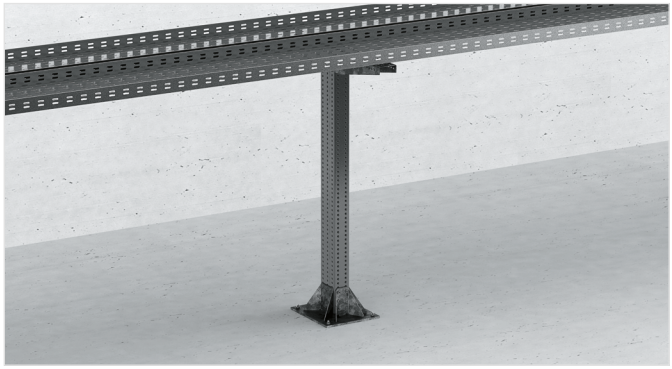

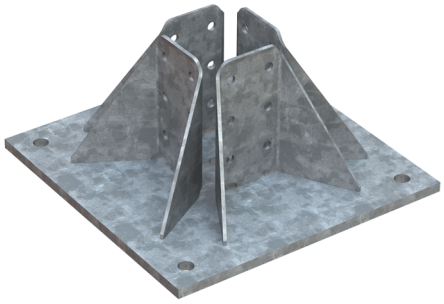

Applications

- Fastening MT-90 box profiles to concrete floors, walls or ceilings
- Anchoring metal framing and MEP support structures with heavy loads to a base material
- Suitable for use in moderately corrosive environments

Advantages

- Part of the Hilti MT system – an economical, all-in-one solution for virtually all modular MEP support structures
- Easy to install – one-step assembly using Hilti MT-TFB thread-forming bolts
- Adaptable – unlike welding, modular post bases allow you to modify metal framing for future MEP requirements

Technical data

Material composition	Q235 or better steel
Surface finish	Outdoor Coated - HDG

MT-B-GL O4 OC Base Material Connector 4-hole - Outdoor

Order Designation	Thickness	Weight	Technical data	Sales pack quantity	Item number	
MT-B-GL O4 OC	12 mm	14949 g	Outdoor, low to moderate pollution (C3 / C4 - low)	1 pc	**2272103**	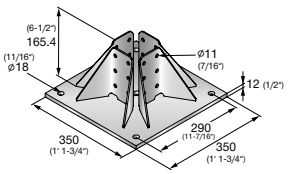

MT-B-GXL O4 OC Base Material Connector 4-hole - Outdoor

Order Designation	Thickness	Weight	Technical data	Sales pack quantity	Item number	
MT-B-GXL O4 OC	12 mm	17070 g	Outdoor, low to moderate pollution (C3 / C4 - low)	1 pc	**2272104**	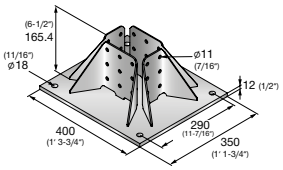

5

MT Box Profiles Baseplates

90° Connectors - Outdoor

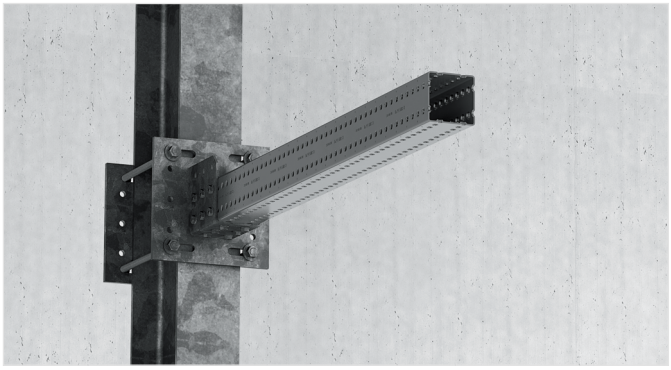

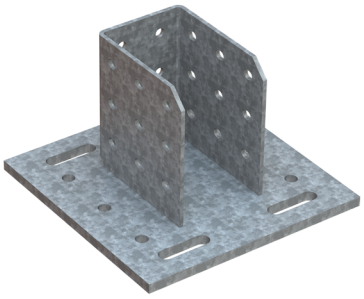

Applications

- Fastening MT-90 and MT-100 box profiles to structural steel
- Anchoring metal framing and MEP support structures with light loads to a base material
- Suitable for use in moderately corrosive environments

Advantages

- Part of the Hilti MT system – an economical, all-in-one solution for virtually all modular MEP support structures
- Easy to install – one-step assembly using Hilti MT-TFB thread-forming bolts
- Adjustable – four slotted anchor holes to simplify baseplate positioning and fastening

Technical data

Material composition	Q355 or better steel
Surface finish	Outdoor Coated - HDG

MT-B-GXL S1 OC Base Material Connector To Steel - Outdoor

Order designation	Thickness	Weight	Technical data	Sales pack quantity	Item number	
MT-B-GXL S1 OC	15 mm	9402 g	Outdoor, low to moderate pollution (C3 / C4 - low)	2 pc	**2272106**	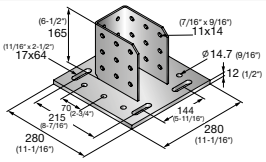

MT-B-GXL S2 OC Base Material Connector To Steel - Outdoor

Order designation	Thickness	Weight	Technical data	Sales pack quantity	Item number	
MT-B-GXL S2 OC	15 mm	9366 g	Outdoor, low to moderate pollution (C3 / C4 - low)	2 pc	**2272107**	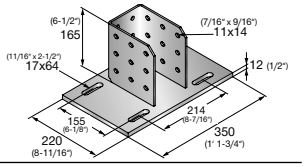

MT-B-GXL S3 OC Base Material Connector To Steel - Outdoor

Order designation	Thickness	Weight	Technical data	Sales pack quantity	Item number	
MT-B-GXL S3 OC	15 mm	10816 g	Outdoor, low to moderate pollution (C3 / C4 - low)	2 pc	**2272108**	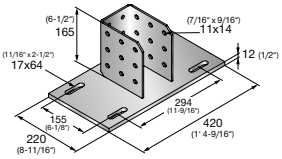

5

MT Box Profiles Baseplates

Angle Brace - Outdoor

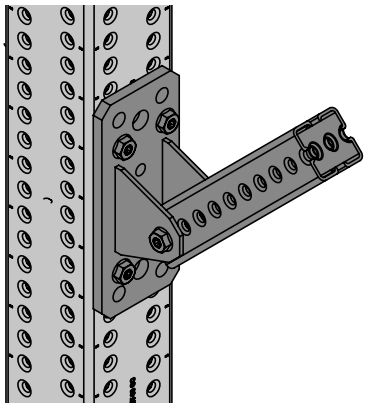

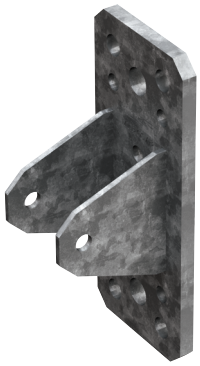

Applications

- Assembling and bracing modular support structures consisting of MT-70 and MT-80 box profiles
- Fastening modular support structures to concrete and steel
- Suitable for use in moderately corrosive environments

Advantages

- Versatile – use it as a box profile-to-box profile connector, for angle braces or for fastening modular support structures to concrete and steel
- Compatible with powder-actuated threaded studs for steel and MT Thread Forming Bolt Channel connectors – for much faster, adaptable assembly
- Corrosion resistance – hot-dip galvanized to help protect against moisture and chemical corrosion

Technical data

Material composition	Q355 or better steel
Surface finish	Outdoor Coated - HDG

MT-B-GS AB OC Angle Brace - Outdoor

Order Designation	Thickness	Weight	Technical data	Sales pack quantity	Item number	
MT-B-GS AB OC	10 mm	1640 g	Outdoor, low to moderate pollution (C3 / C4 - low)	8 pc	**2332787**	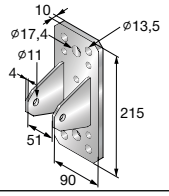

5

MT Box Profiles Baseplates

Angle Brace - Outdoor

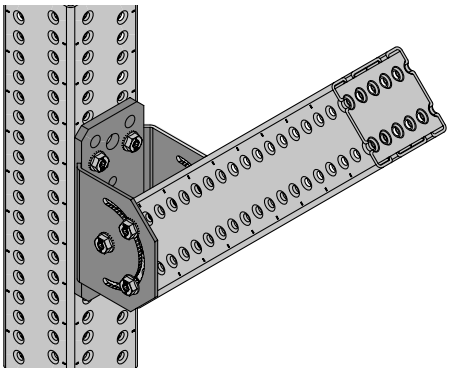

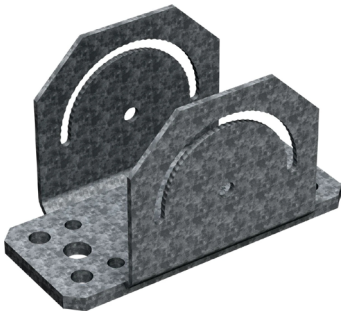

Applications

- Mounting MT-80, MT-90 and MT-100 box profiles on inclined steel surfaces
- Mounting MT-80, MT-90 and MT-100 at an angle ranging from +/- 90 degrees for bracing or long span supports
- Fastening heavy-duty, floor-mounted single pipe supports

Advantages

- Higher load resistance – more bolting points and stronger construction than previous Hilti baseplates
- Corrosion resistance – hot-dip galvanized to help protect against moisture and chemical corrosion
- Part of the Hilti MT system – an economical, all-in-one solution for virtually all modular MEP support structures

Technical data

Material composition	Q355 or better steel
Surface finish	Outdoor Coated - HDG

MT-B GL AB OC Angle Brace - Outdoor

Order Designation	Thickness	Technical data	Sales pack quantity	Item number
MT-B GL AB OC	10 mm	Outdoor, low to moderate pollution (C3 / C4 - low)	6 pc	**2353811** 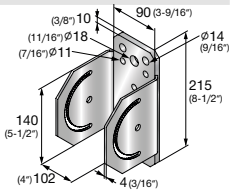

5

MT Box Profiles Baseplates

Starter Bracket - Outdoor

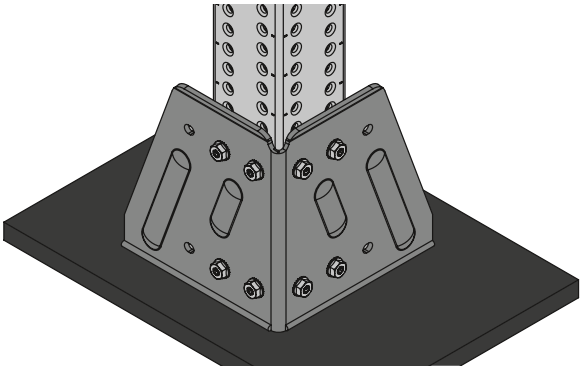

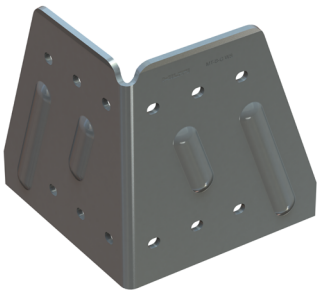

Applications

- Creating base connectors for MT-70, MT-80, MT-90 and MT-100 box profiles on structural steel

Advantages

- Part of the Hilti MT system – an economical, all-in-one solution for virtually all modular MEP support structures
- Versatile – creates a post base connection at any location on structural steel
- Simplicity – one WS bracket can be used for all MT box profiles: MT-70, 80, 90 and 100

Technical data

Material composition	Q355 or better steel
Surface finish	Not Galvanized

MT-B-G WS NC Starter Bracket

Order Designation	Thickness	Weight	Technical data	Sales pack quantity	Item number	
MT-B-G WS NC	6 mm	4345 g	Outdoor, low to moderate pollution (C3 / C4 - low)	4 pc	**2272109**	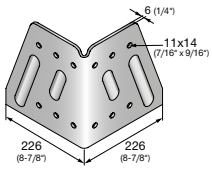

5

MT Box Profiles Baseplates

Angle Connector - Outdoor

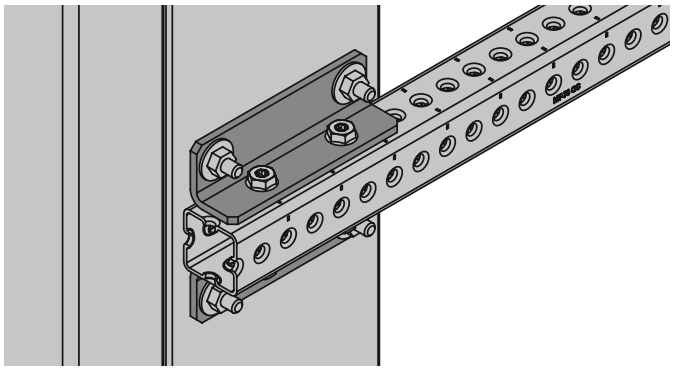

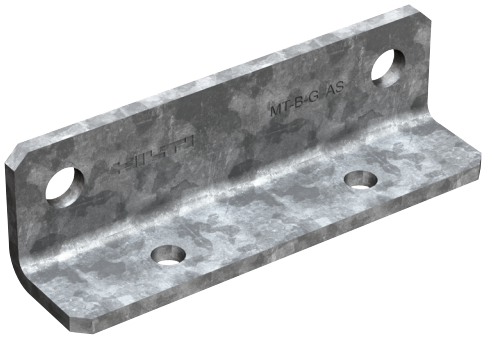

Applications

- Fastening MT-70 and MT-80 box profiles to steel beams
- Suitable for use in moderately corrosive environments

Advantages

- A faster and more economical solution for installing box profile cantilevers directly to steel beams
- Compatible with powder-actuated threaded studs for steel and MT Thread Forming Bolt Channel connectors – for much faster, adaptable assembly
- Corrosion resistance – hot-dip galvanized to help protect against moisture and chemical corrosion

Technical data

Material composition	Q355 or better steel
Surface finish	Outdoor Coated - HDG

MT-B-G AS OC Base connector (outdoor)

Order Designation	Thickness	Weight	Technical data	Sales pack quantity	Item number	
MT-B-G AS OC	6 mm	560 g	Outdoor, low to moderate pollution (C3 / C4 - low)	10 pc	**2332781**	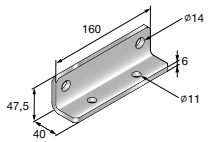

5

MT Box Profiles Baseplates
90° Connectors - Outdoor

Technical data Baseplate

Item image	Load drawing	Order Designation	+ Fz	- Fz	± Fx	± Fy
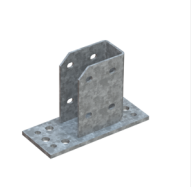	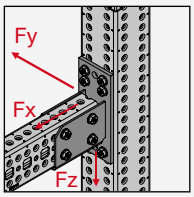	**MT-B-GS T OC**	25,9 kN	15,0 kN	20,4 kN	8,5 kN
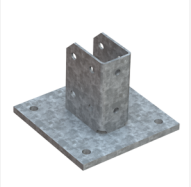	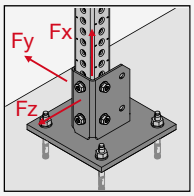	**MT-B-GS O4U OC**	26,4	18,0 kN	53,9 kN	16,0 kN
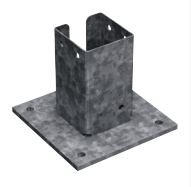	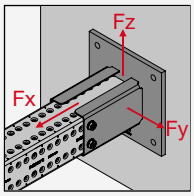	**MT-B-GL O4C OC**	14,7 kN	14,47 kN	44,3 kN	10,1 kN
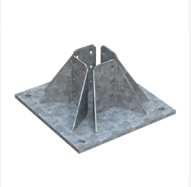	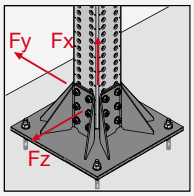	**MT-B-GL O4 OC**	55,2 kN	55,2 kN	122,4 kN	55,2 kN
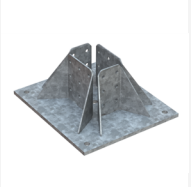	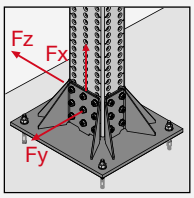	**MT-B-GXL O4 OC**	93,4 kN	93,4 kN	145,7 kN	87,7 kN
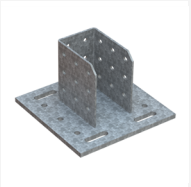	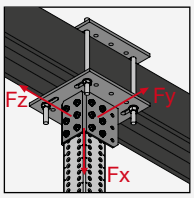	**MT-B-GXL S1 OC**	14,9 kN	14,9 kN	74,7 kN	14,9 kN
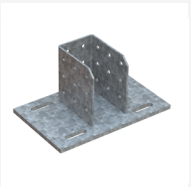	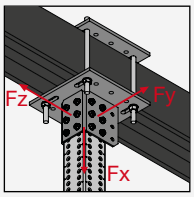	**MT-B-GXL S2 OC**	14,9 kN	14,9 kN	66,1 kN	14,9 kN

Design notes
- Shown load values are recommended values with partial safety factors for actions and resistance included
- Design value = 1.5 * recommended value
- The design resistance of the products is defined in accordance with EN1993

5

MT Box Profiles Baseplates
90° Connectors, Angle Brace, Starter Bracket - Outdoor

Technical data Base Connector

Item image	Load drawing	Order Designation	+ Fz	- Fz	± Fx	± Fy
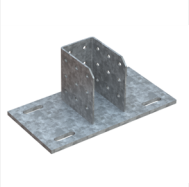	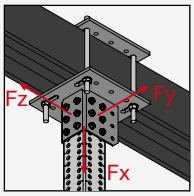	**MT-B-GXL S3 OC**	14,9 kN	14,9 kN	40,2 kN	14,9 kN

Design notes
- Shown load values are recommended values with partial safety factors for actions and resistance included
- Design value = 1.5 * recommended value
- The design resistance of the products is defined in accordance with EN1993

Technical data Angle Brace

Item image	Load drawing	Order Designation	+ Fz	± Fx	± Fy
	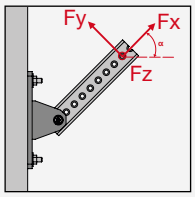	**MT-B-GS AB OC**	3,0 kN	18,1 kN	18,1 kN

Design notes
- Shown load values are recommended values with partial safety factors for actions and resistance included
- Design value = 1.5 * recommended value
- The design resistance of the products is defined in accordance with EN1993

Technical data Starter Bracket

Item image	Load drawing	Order Designation	+ Fz	- Fz	± Fx	± Fy
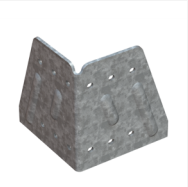	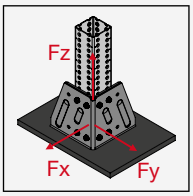	**MT-B-GS WS NC**	84,7 kN	84,7 kN	22,2 kN	22,2 kN

Design notes
- Load values are only valid if MT-90 Box profile are used.
- Shown load values are recommended values with partial safety factors for actions and resistance included
- Design value = 1.5 * recommended value
- The design resistance of the products is defined in accordance with EN1993

Technical data Base Connector

Item image	Load drawing	Order Designation	+ Fz	± Fx	± Fy
	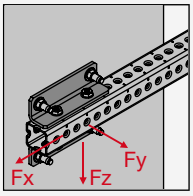	**MT-B-G AS OC**	23,9 kN	47,1 kN	7,1 kN

Design notes
- Shown load values are recommended values with partial safety factors for actions and resistance included
- Design value = 1.5 * recommended value
- The design resistance of the products is defined in accordance with EN1993

5

MT Box Profiles Baseplates

90° Connector - Outdoor

Operation Instruction

MT-B-GS T OC

2294558-07.2020

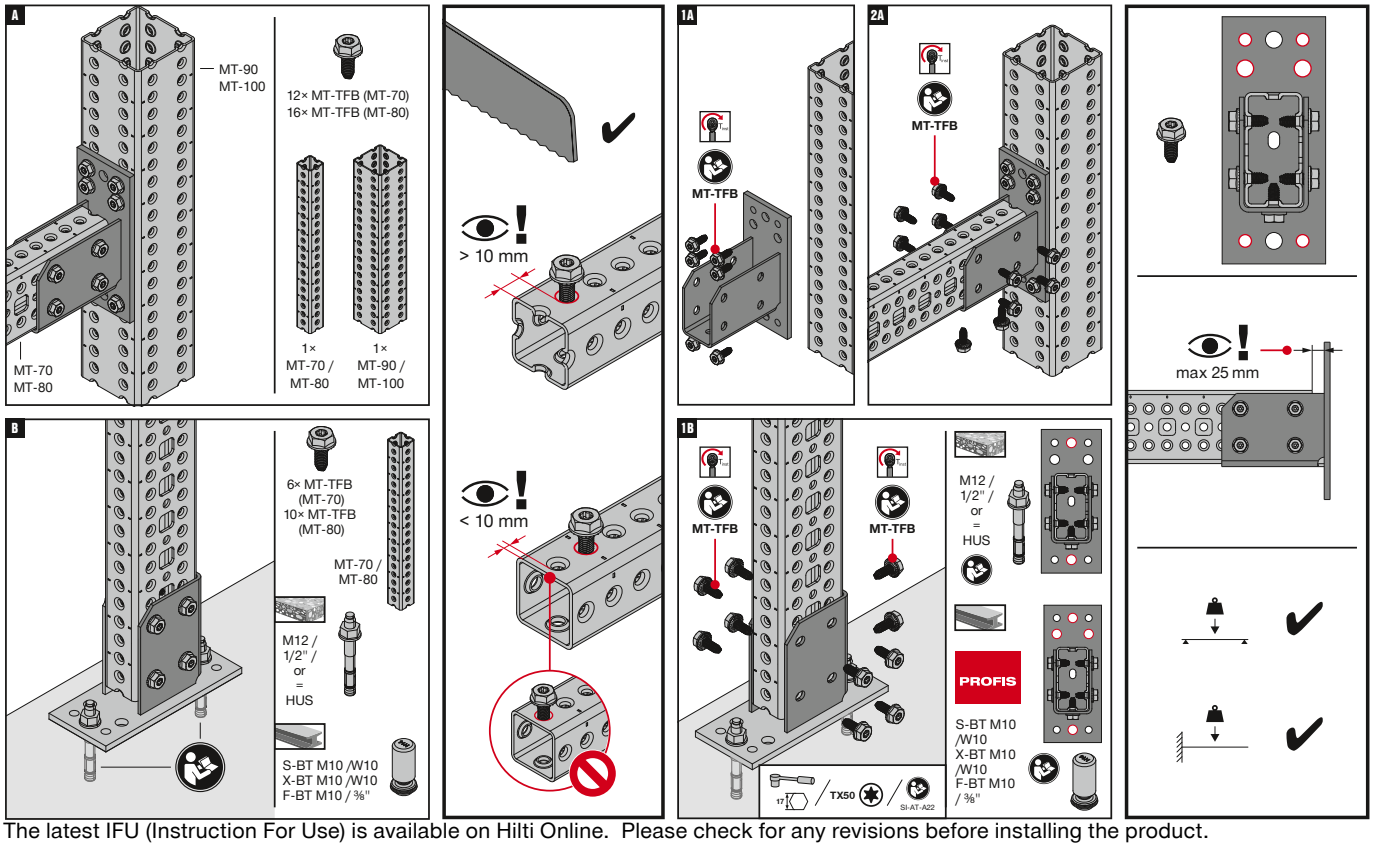

The latest IFU (Instruction For Use) is available on Hilti Online. Please check for any revisions before installing the product.

MT-B-GS O4U OC

2294559-06.2020

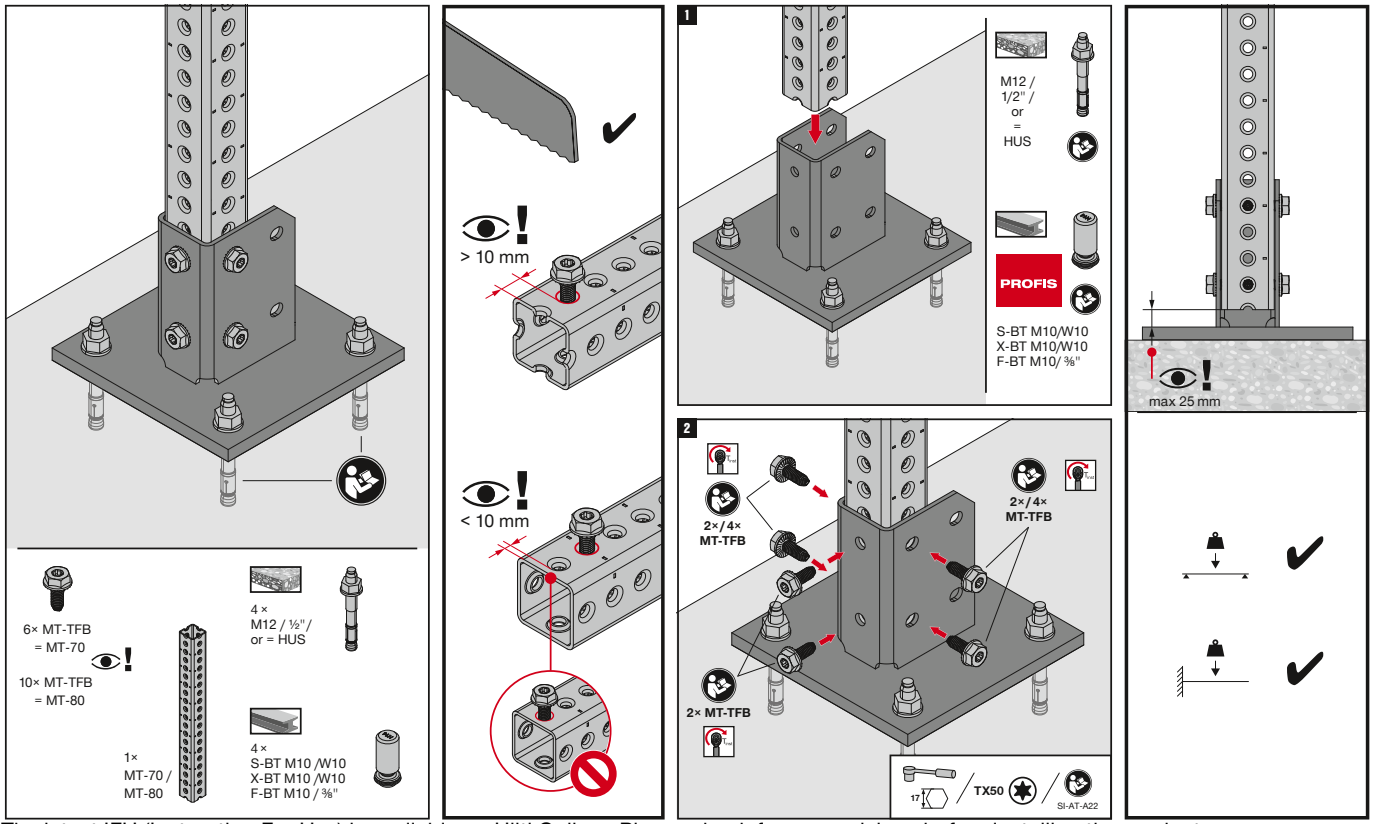

The latest IFU (Instruction For Use) is available on Hilti Online. Please check for any revisions before installing the product.

5

MT Box Profiles Baseplates

90° Connector - Outdoor

Operation Instruction

MT-B-GL O4C OC

2347956-12.2021

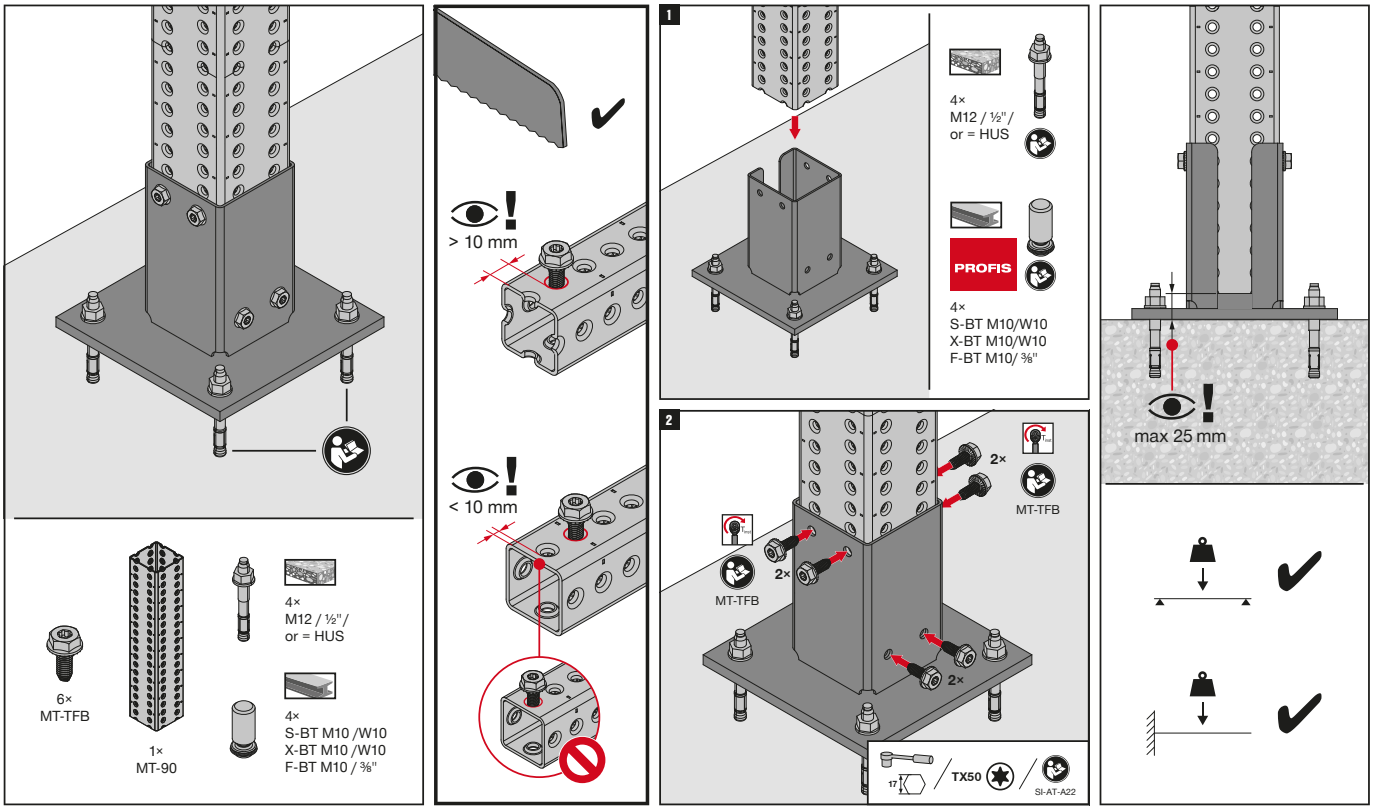

The latest IFU (Instruction For Use) is available on Hilti Online. Please check for any revisions before installing the product.

MT-B-GL O4 OC / MT-B-GXL O4 OC

2294690-05.2020

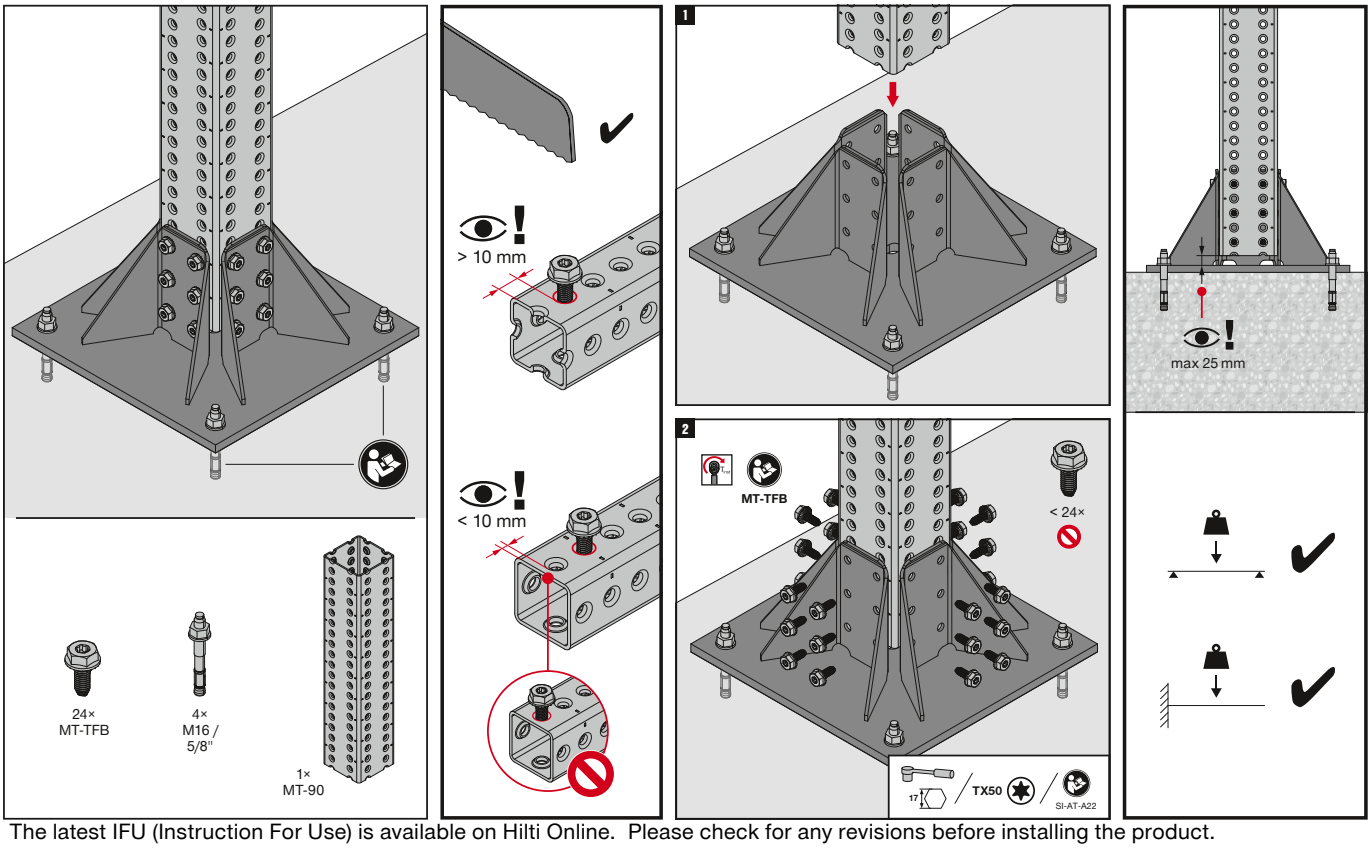

The latest IFU (Instruction For Use) is available on Hilti Online. Please check for any revisions before installing the product.

5

MT Box Profiles Baseplates

90° Connector, Angle Brace - Outdoor

Operation Instruction

MT-B-GXL S1 OC / MT-B-GXL S2 OC / MT-B-GXL S3 OC

2294692-09.2020

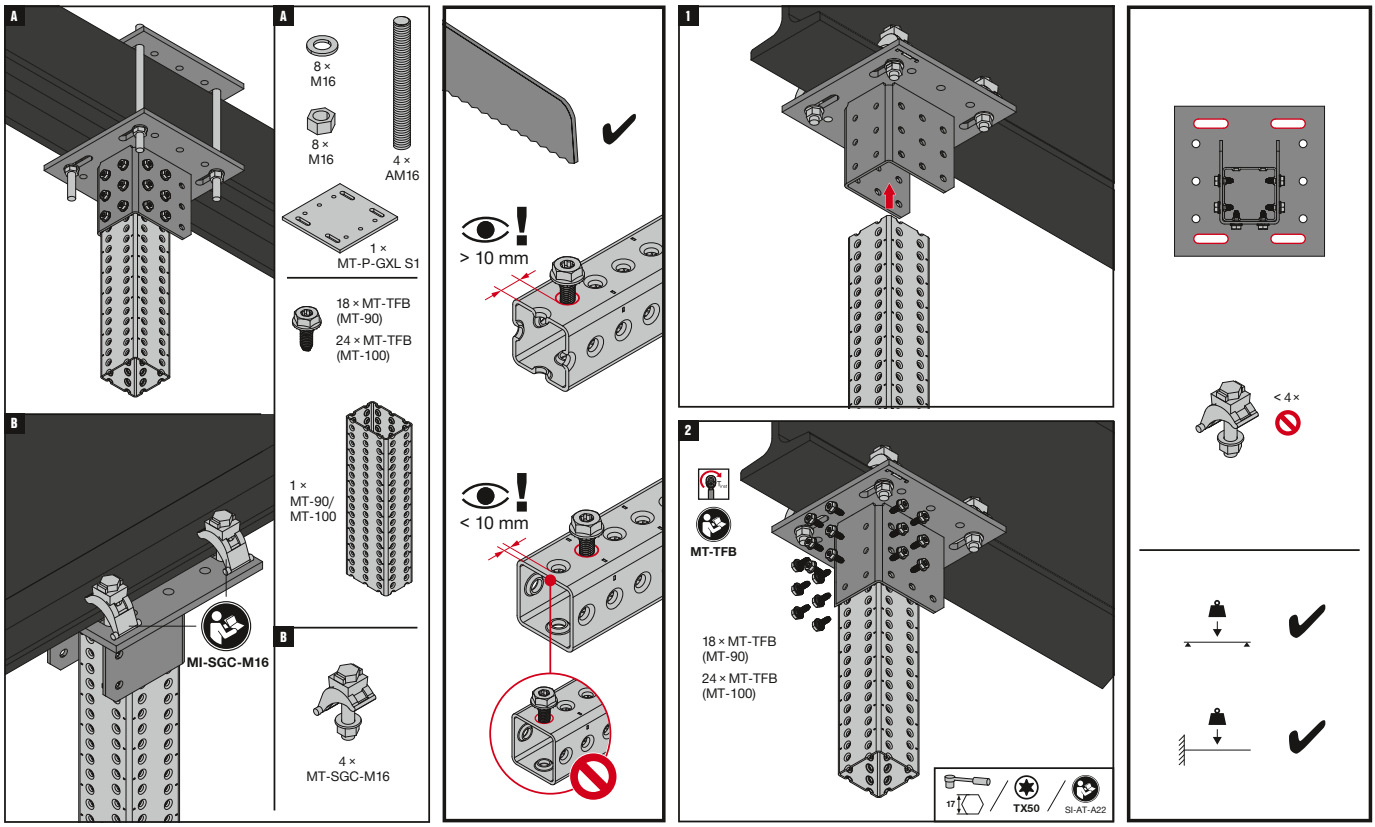

The latest IFU (Instruction For Use) is available on Hilti Online. Please check for any revisions before installing the product.

MT-B-GS AB OC

2334522-08.2021

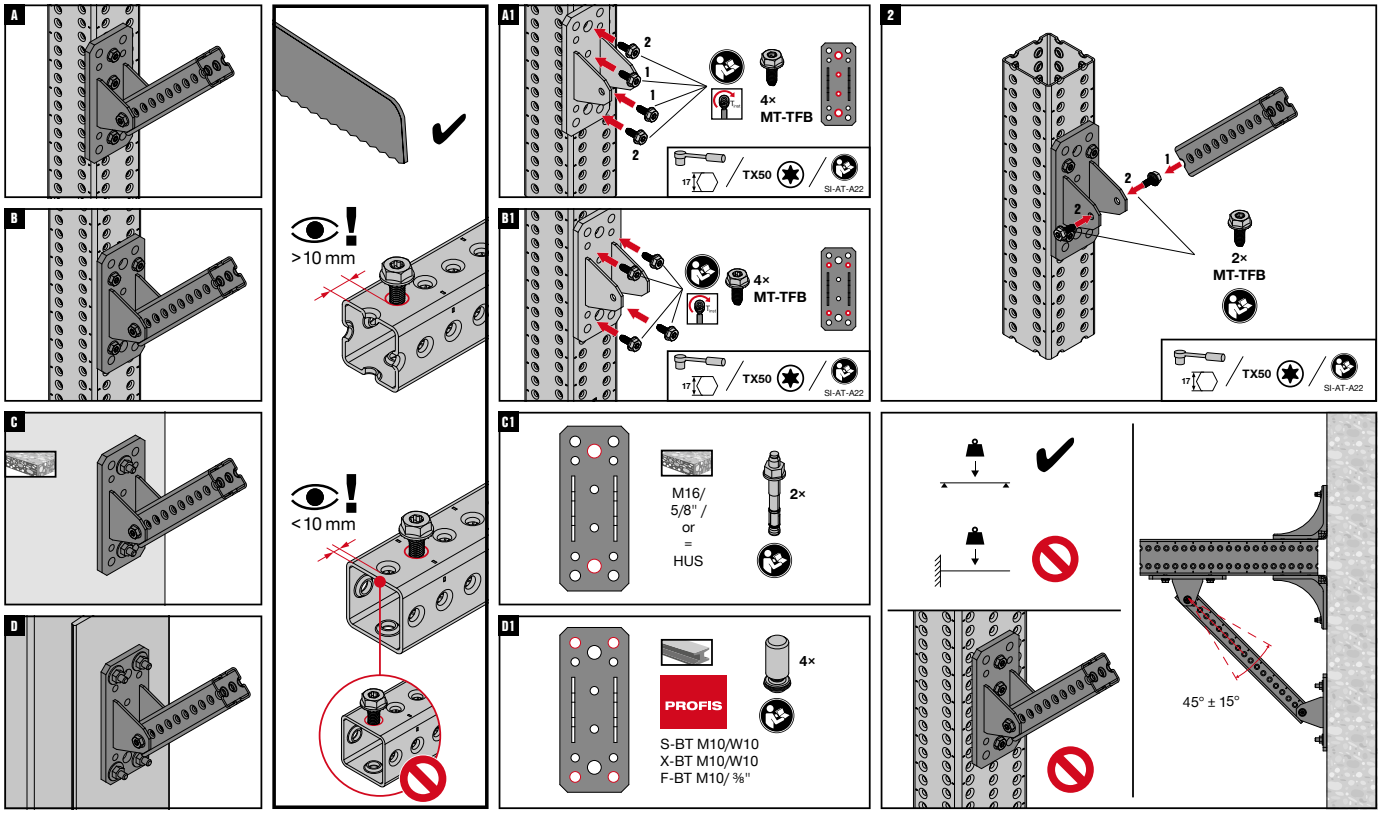

The latest IFU (Instruction For Use) is available on Hilti Online. Please check for any revisions before installing the product.

5

MT Box Profiles Baseplates

Angle Brace, Starter Bracket - Outdoor

Operation Instruction

MT-B-GL AB OC

2359996-04.2022

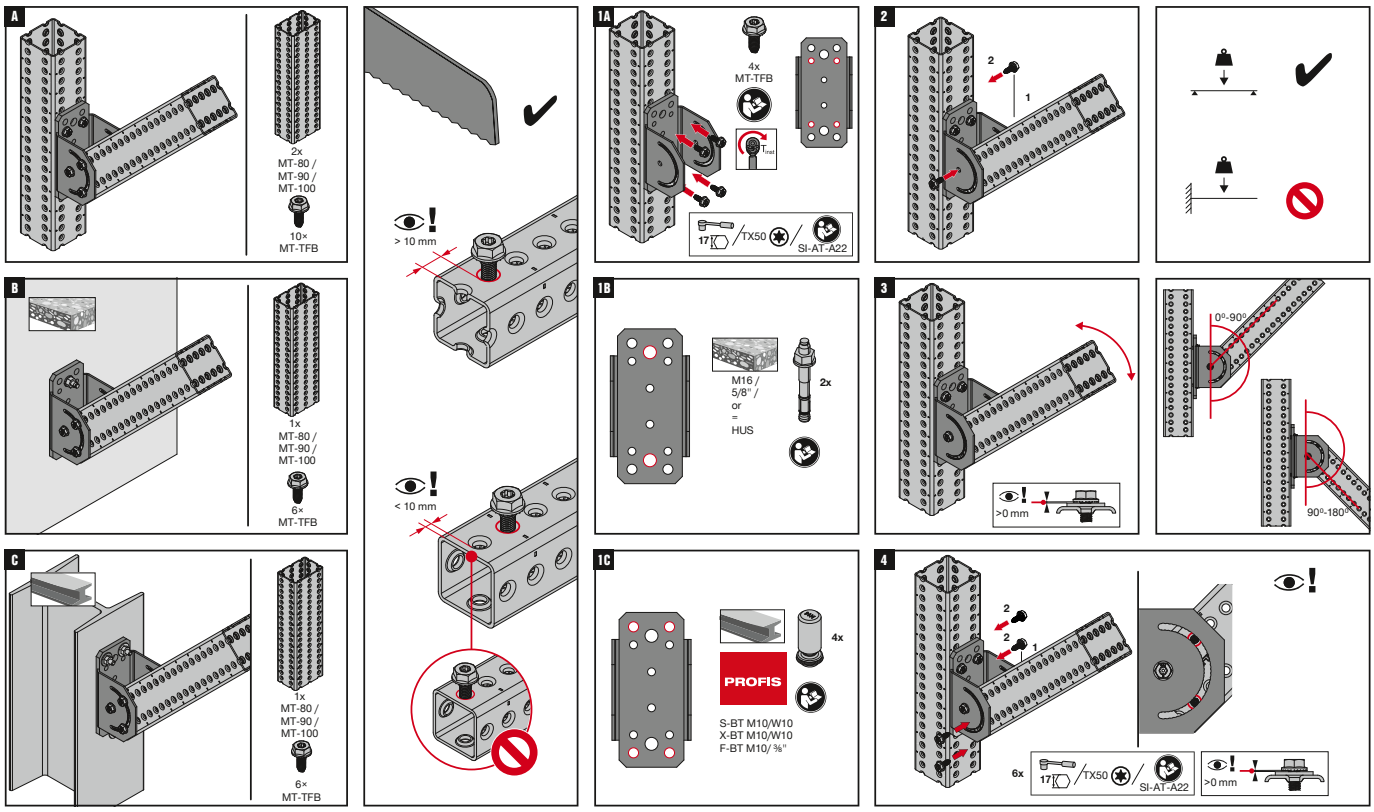

The latest IFU (Instruction For Use) is available on Hilti Online. Please check for any revisions before installing the product.

MT-B-G WS NC

2294693-07.2020

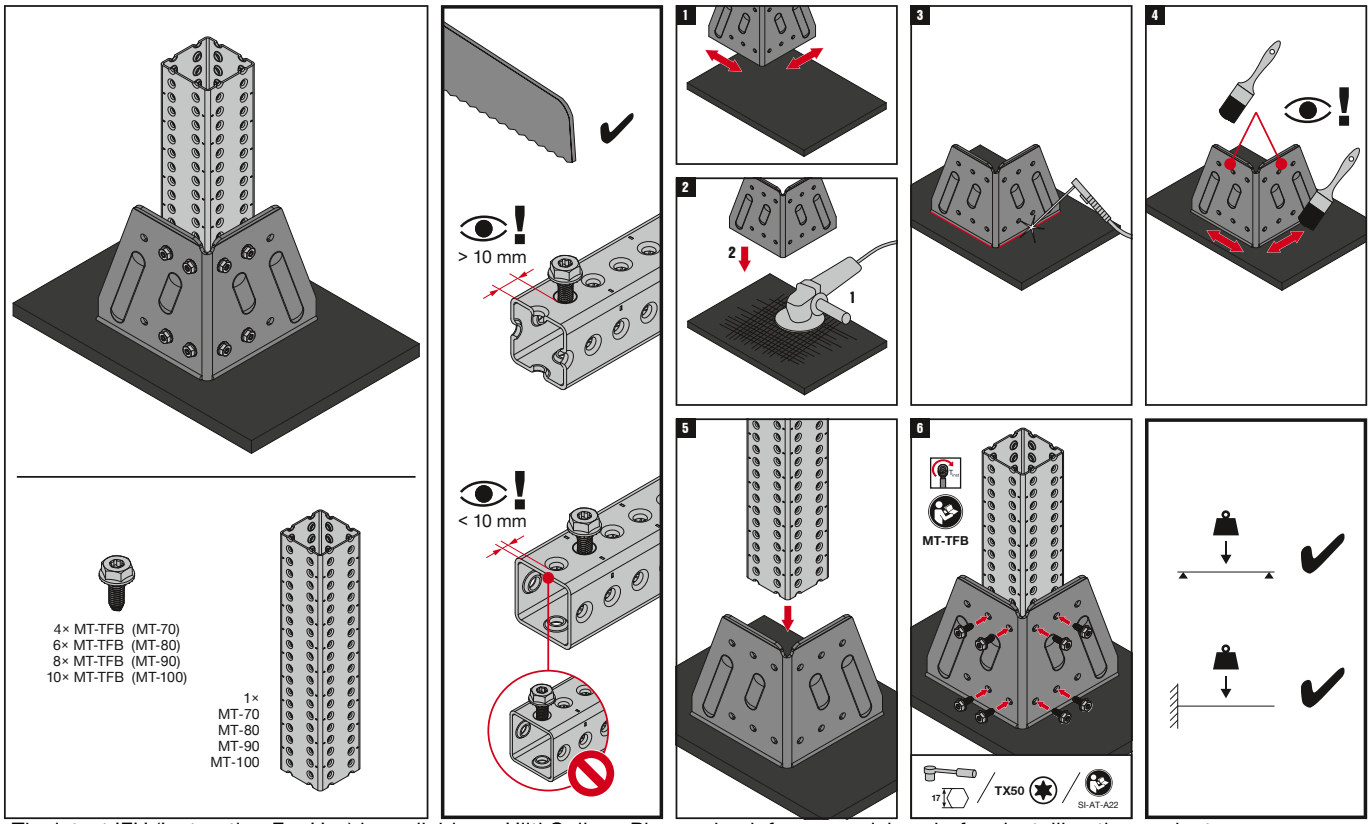

The latest IFU (Instruction For Use) is available on Hilti Online. Please check for any revisions before installing the product.

5

MT Box Profiles Baseplates

Angle Connector - Outdoor

Operation Instruction

MT-B-G AS OC

2334552-07.2020

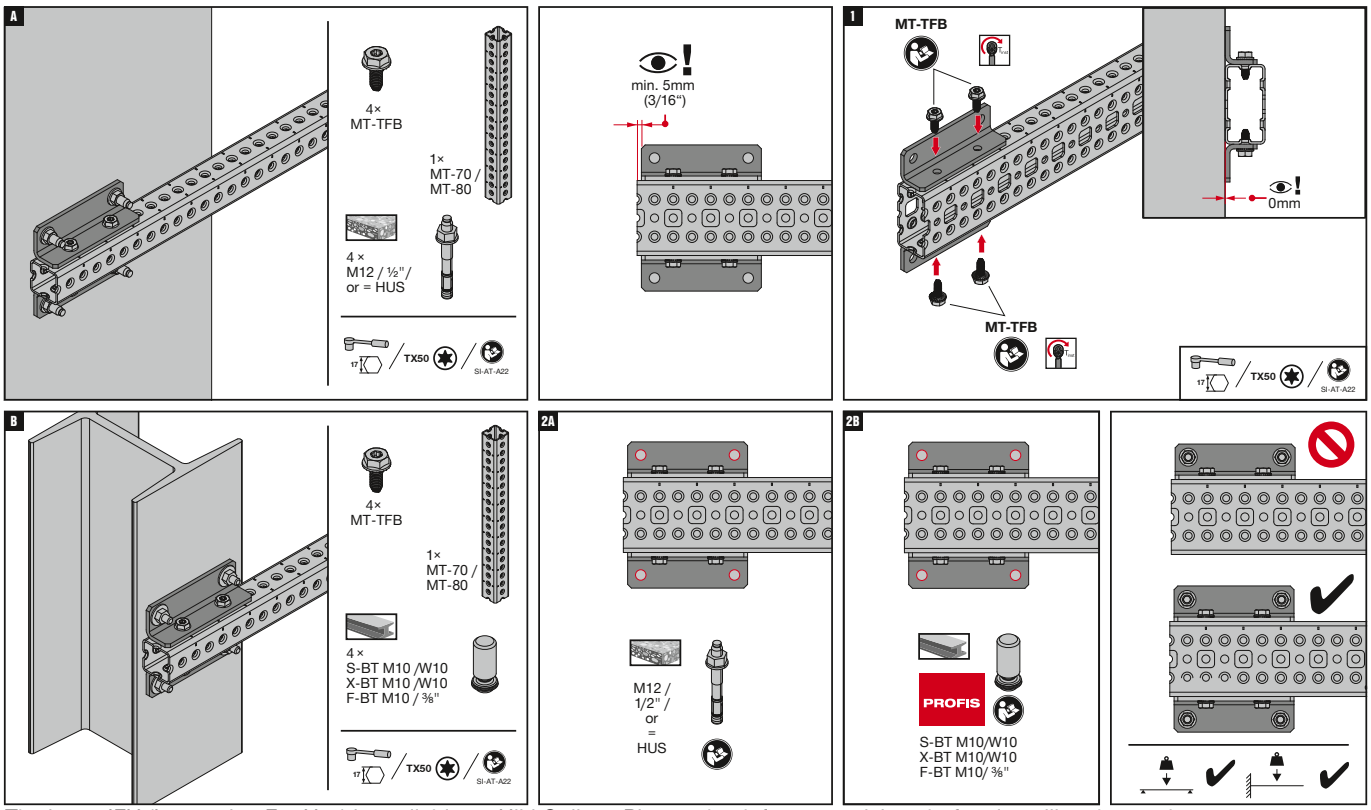

The latest IFU (Instruction For Use) is available on Hilti Online. Please check for any revisions before installing the product.

5

MT Box Profiles Baseplates

Sandwich Plate - Outdoor

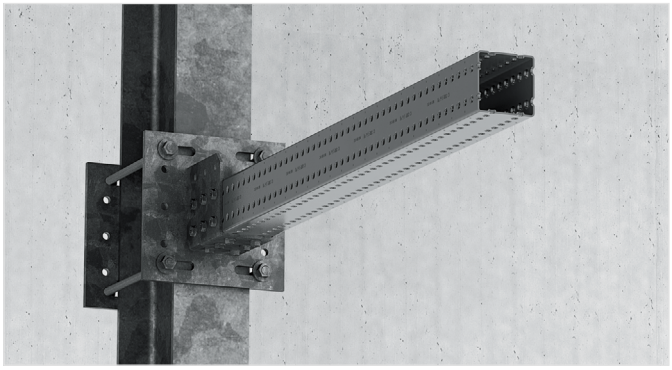

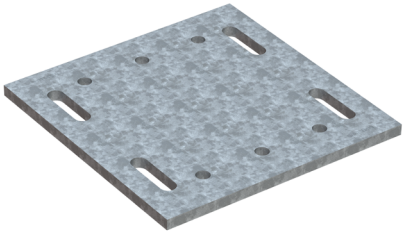

Applications

- Assembling a sandwich clamp around structural steel for fastening MT baseplates (threaded rod required)
- Suitable for use in moderately corrosive environments

Advantages

- Part of the Hilti MT system – an economical, all-in-one solution for virtually all modular MEP support structures
- Easy to install – four slotted anchor holes to simplify positioning
- No drilling, welding or anchoring required – clamp modular baseplates around a steel beam without fastening directly to it

Technical data

Material composition	Q355 or better steel
Surface finish	Outdoor Coated - HDG

MT-P-GXL S1 OC Sandwich Plate - Outdoor

Order Designation	Thickness	Weight	Technical data	Sales pack quantity	Item number	
MT-P-GXL S1 OC	15 mm	6902 g	Outdoor, low to moderate pollution (C3 / C4 - low)	2 pc	**2272110**	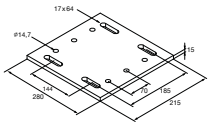

5

MT Box Profiles Baseplates

Modular Base Plate - Outdoor

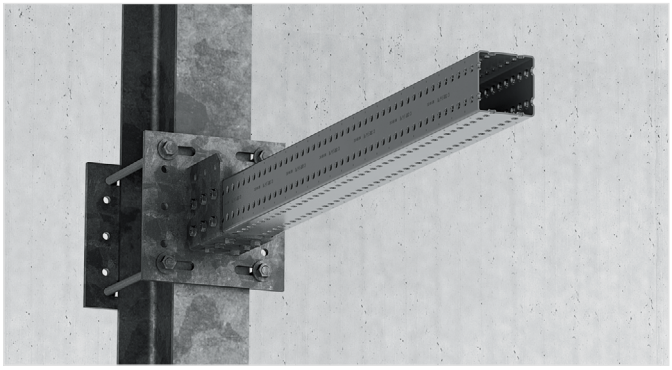

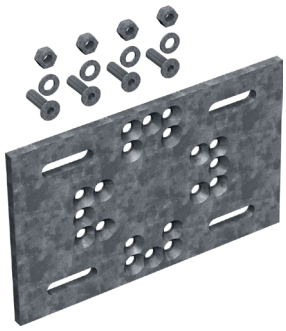

Applications

- Attaching triangular bracing and grid baseplates to structural steel without the need for direct fastening
- Bracing connections to steel, box profile cantilevers with MT-70/80 to steel and back plates for sandwich connections

Advantages

- Part of the Hilti MT system – an economical, all-in-one solution for virtually all modular MEP support structures
- Lighter MEP support structures – save weight compared with MI and welded solutions
- Compatible with the Hilti Adaptive Torque system – use a cordless impact wrench to tighten nuts to the correct pretension more economically (compatible tool and SI-AT module required)

Technical data

Material composition	Q355 or better steel
Surface finish	Outdoor Coated - HDG

MT-P-G S1 / S2 / S3 OC Modular Base Plate - Outdoor

Order Designation	Thickness	Weight	Technical data	Sales pack quantity	Item number	
MT-P-G S1 OC	12 mm	3368g	Outdoor, low to moderate pollution (C3 / C4 - low)	2 baseplates, 8 bolts, 8 washers and 8 nuts	**2343199**	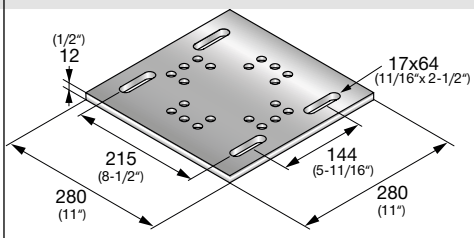
MT-P-G S2 OC	12 mm	3302g		2 baseplates, 8 bolts, 8 washers and 8 nuts	**2343280**	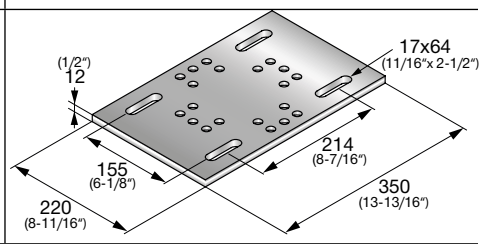
MT-P-G S3 OC	12 mm	4131g		2 baseplates, 8 bolts, 8 washers and 8 nuts	**2343281**	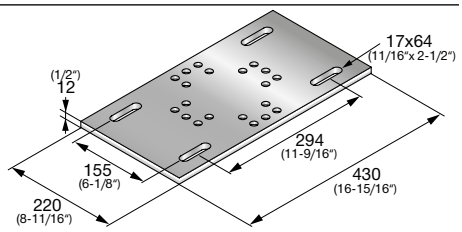

5

MT Box Profiles Baseplates

Modular Base Plate - Outdoor

MT-P-GM S1 / S2 / S3 OC Modular Base Plate - Outdoor

Order Designation	Thickness	Weight	Technical data	Sales pack quantity	Item number	
MT-P-GM S1 OC set	12 mm	6550g	Outdoor, low to moderate pollution (C3 / C4 - low)	1 baseplates, 4 bolts, 4 washers and 4 nuts	**2345353**	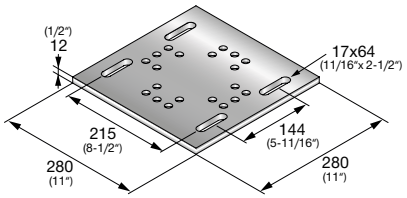
MT-P-GM S2 OC set	12 mm	6450g		1 baseplates, 4 bolts, 4 washers and 4 nuts	**2345354**	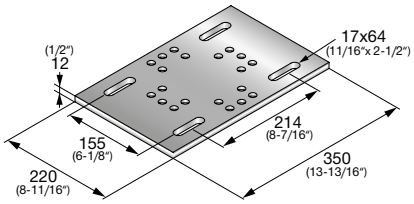
MT-P-GM S3 OC set	12 mm	8100g		1 baseplates, 4 bolts, 4 washers and 4 nuts	**2345355**	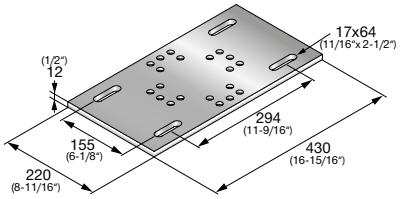

5

MT Box Profiles Baseplates

Connections To Steel - Outdoor

Operation Instruction

MT-B-GXL S1 OC / MT-B-GXL S2 OC / MT-B-GXL S3 OC

2294692-09.2020

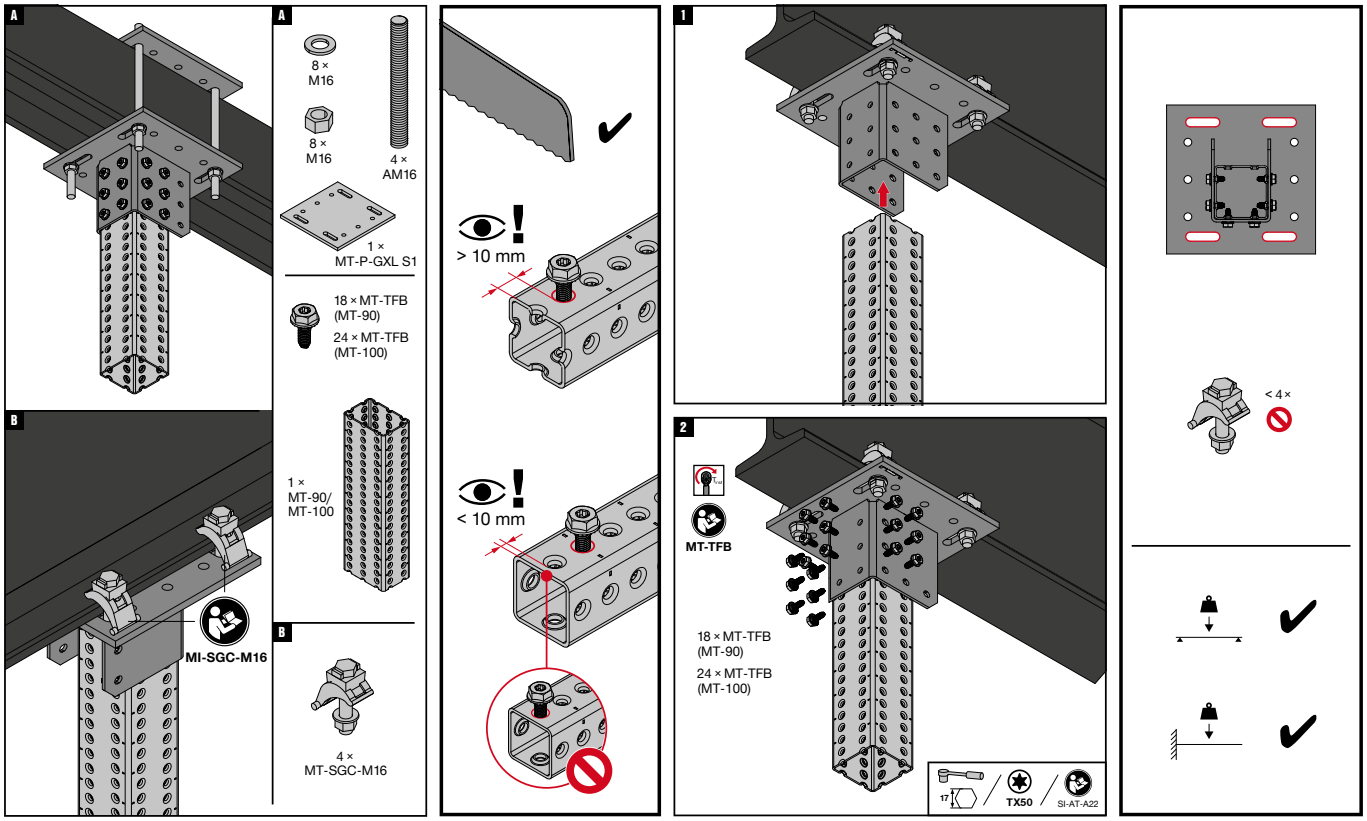

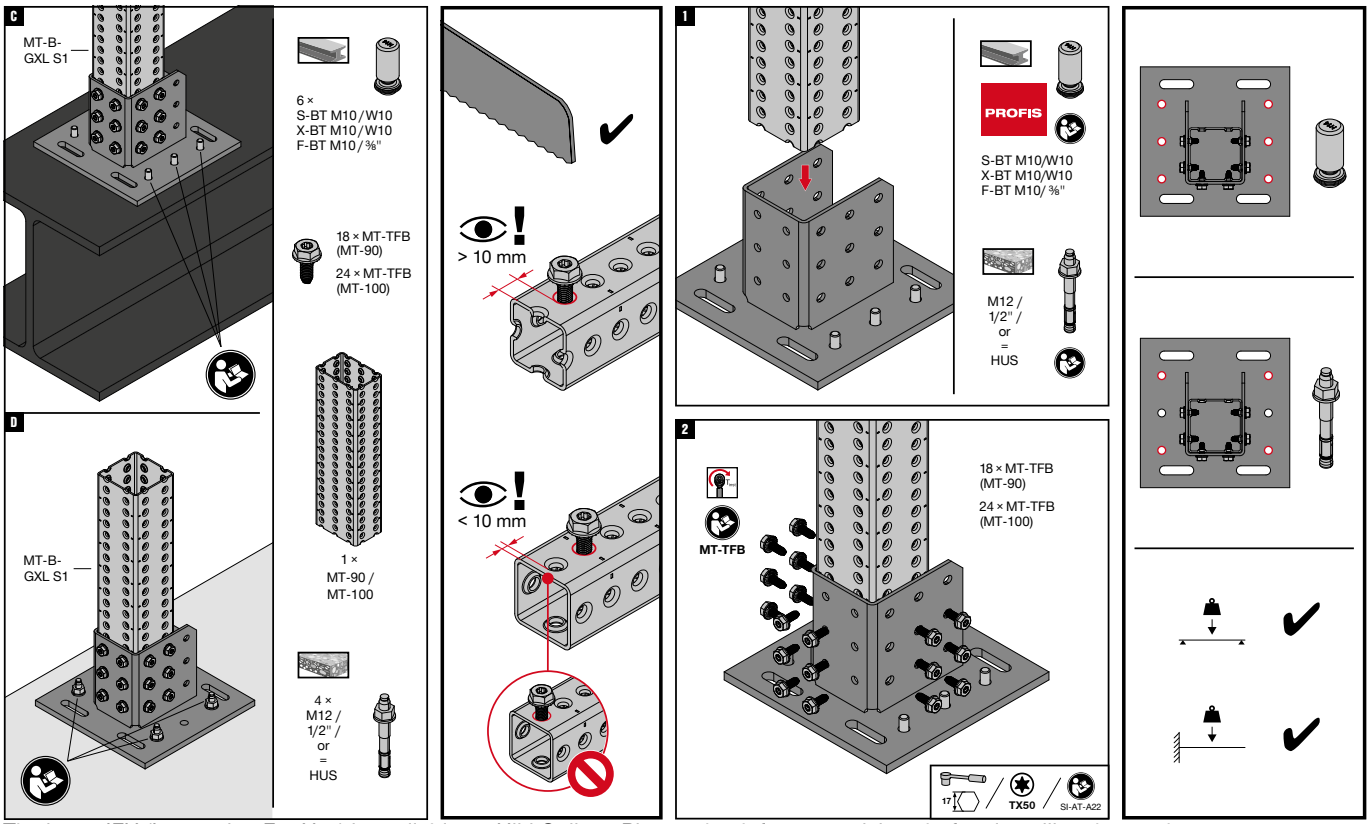

The latest IFU (Instruction For Use) is available on Hilti Online. Please check for any revisions before installing the product.

5

MT Box Profiles Baseplates

Connections To Steel - Outdoor

Operation Instruction

MT-P-GM S1 OC + MT-P-G S1 OC / MT-P-GM S2 OC + MT-P-G S2 OC / MT-P-GM S3 OC + MT-P-G S3 OC

2347908-11.2021

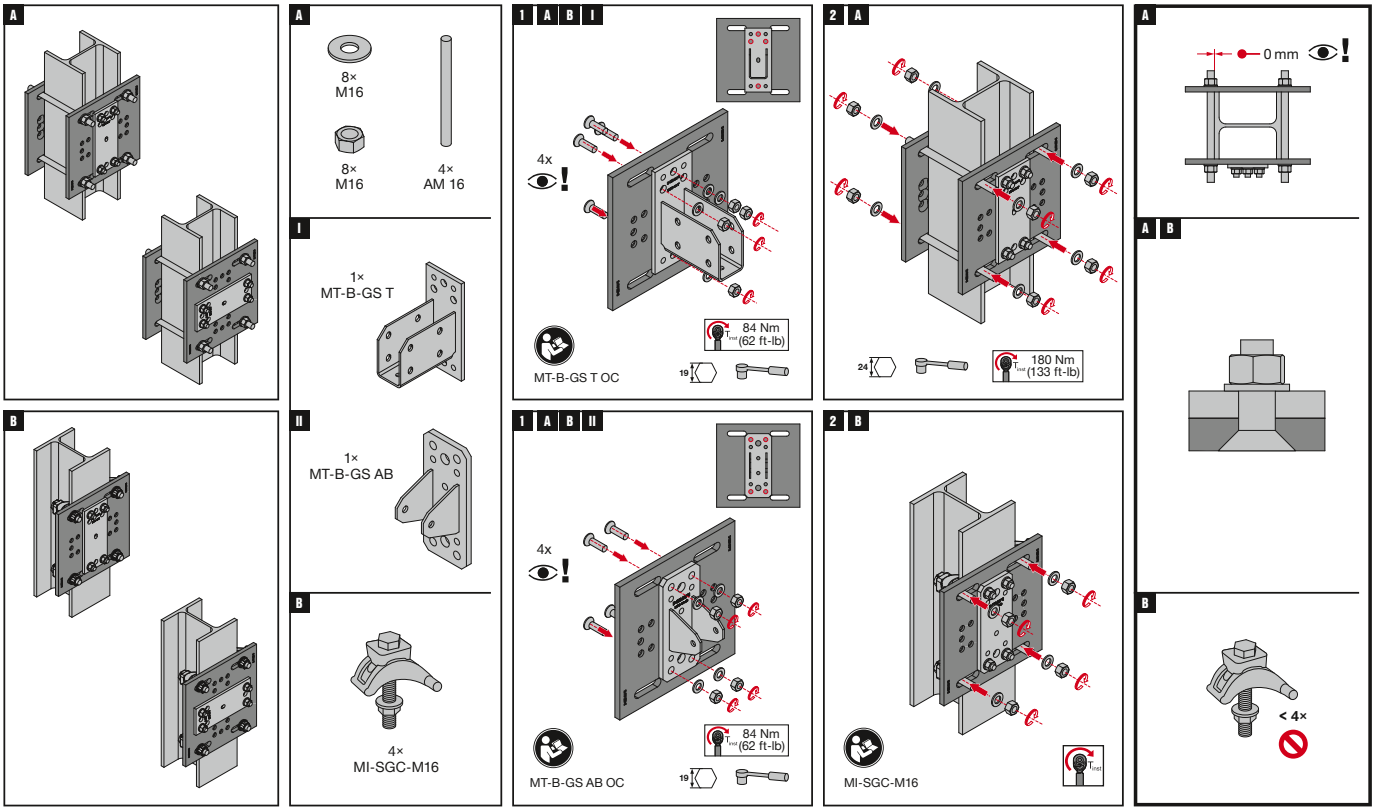

The latest IFU (Instruction For Use) is available on Hilti Online. Please check for any revisions before installing the product.

MT Media Fixation For Open C-Channels

Threaded Fixation Plate

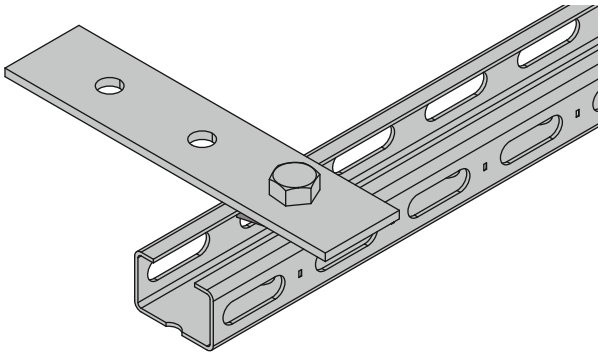

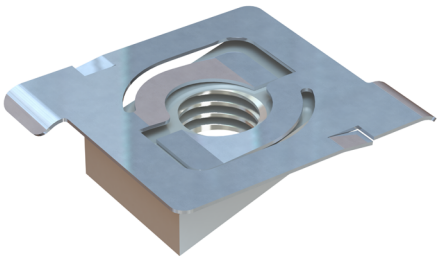

Applications

- Attaching MEP media (hardware) to MT C-when no shear load resistance is required

Technical data

Material composition	Q235B or better steel
Surface finish	Pre-galvanized - for dry indoor use only

Advantages

- Part of the Hilti MT system – an economical, all-in-one solution for virtually all modular MEP support structures
- Simple media fixation method where no shear force resistance required
- Easy to install – insert into C-Channel using a one-handed “push-and-twist” motion

MT-FPT M8 / M10 / M12 Threaded Fixation Plate

Order Designation	Technical data	Sales pack quantity	Item number	
MT-FPT M8	Dry indoor conditions (C1) Indoor with temporary condensation (C2)	50 pc	**2281867**	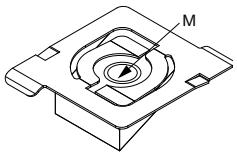
MT-FPT M10		50 pc	**2282193**	
MT-FPT M12		50 pc	**2282195**	

MT Media Fixation For Open C-Channels

Threaded Fixation Plate - Outdoor

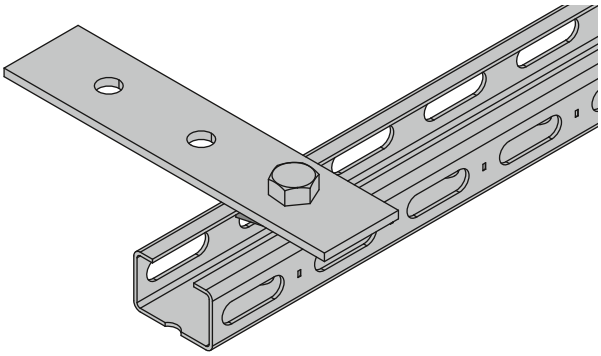

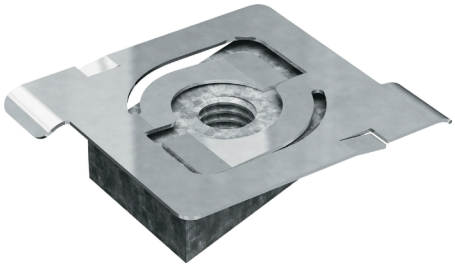

Applications

- Attaching MEP media (hardware) to MT C-when no shear load resistance is required

Technical data

Material composition	Q235B or better
Surface finish	Hot-dip galvanized - for outdoor use

Advantages

- Part of the Hilti MT system – an economical, all-in-one solution for virtually all modular MEP support structures
- Simple media fixation method where no shear force resistance required
- Easy to install – insert into C-Channel using a one-handed “push-and-twist” motion

MT-FPT OC M8 / M10 / M12 OC Threaded Fixation Plate - Outdoor

Order Designations	Technical data	Sales pack quantity	Item number	
MT-FPT M8 OC	Outdoor, low to moderate pollution (C3 / C4 - low)	50 pc	**2282192**	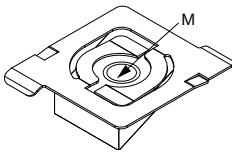
MT-FPT M10 OC		50 pc	**2282194**	
MT-FPT M12 OC		50 pc	**2282196**	

6

MT Media Fixation For Open C-Channels

Threaded Fixation Plate

Operation Instruction

MT-FPT / MT-FPT OC

2294627-07.2020

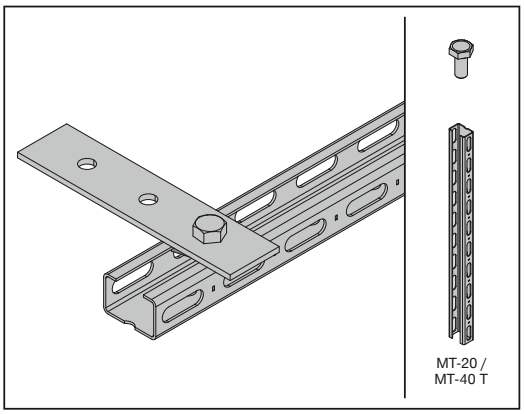

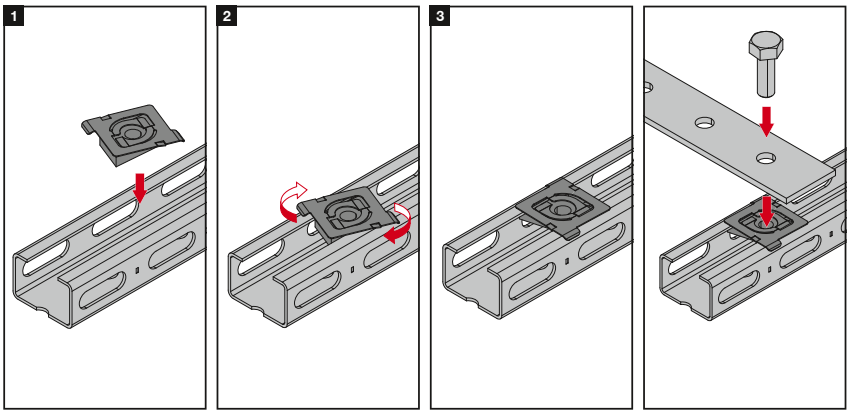

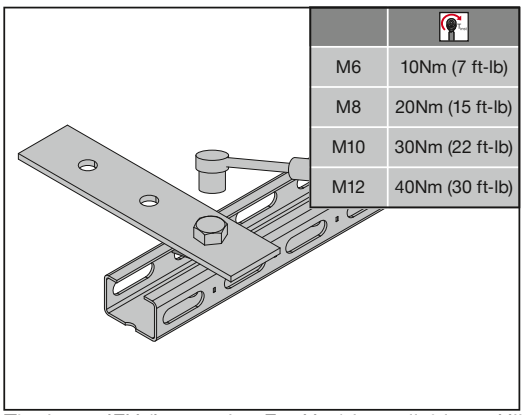

M6	10Nm (7 ft-lb)
M8	20Nm (15 ft-lb)
M10	30Nm (22 ft-lb)
M12	40Nm (30 ft-lb)

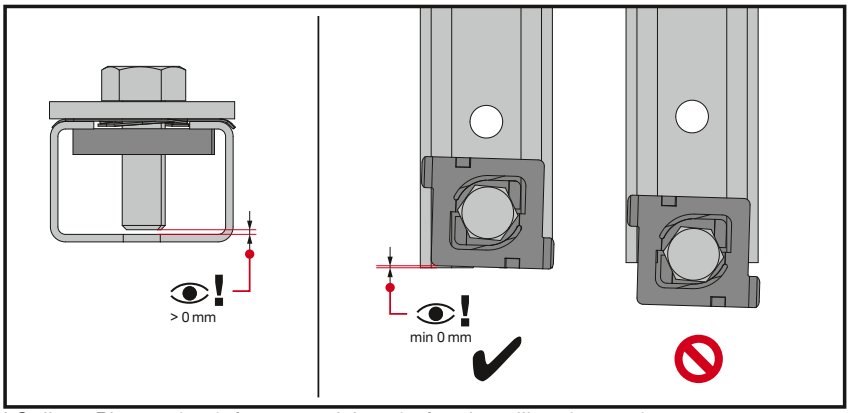

The latest IFU (Instruction For Use) is available on Hilti Online. Please check for any revisions before installing the product.

MT Media Fixation For Open C-Channels

Threaded Fixation Plate

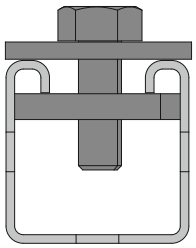

Applications

- Attaching MEP media (hardware) to MT C-when no shear load resistance is required
- Suitable for use in dry, indoor environments

Advantages

- Part of the Hilti MT system – an economical, all-in-one solution for virtually all modular MEP support structures
- Simple media fixation method where no shear force resistance required

Technical data

Material composition	Q235B or better steel
Surface finish	Pre-galvanized - for dry indoor use only

MT-FP M6 / M8 / M10 / M12 / M16 Threaded Fixation Plate

Order Designation	Technical data	Sales pack quantity	Item number	
MT-FP M6	Dry indoor conditions (C1) Indoor with temporary condensation (C2)	100 pc	**2273653**	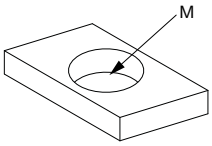
MT-FP M8		100 pc	**2273655**	
MT-FP M10		100 pc	**2273657**	
MT-FP M12		100 pc	**2273659**	
MT-FP M16		100 pc	**2273671**	

MT Media Fixation For Open C-Channels

Threaded Fixation Plate - Outdoor

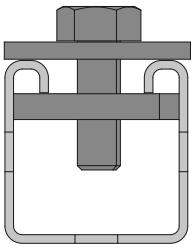

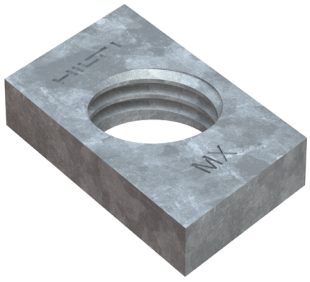

Applications

- Attaching MEP media (hardware) to MT C-when no shear load resistance is required
- Suitable for use in moderately corrosive environments

Advantages

- Part of the Hilti MT system – an economical, all-in-one solution for virtually all modular MEP support structures
- Simple media fixation method where no shear force resistance required
- Corrosion resistance – hot-dip galvanized to help protect against moisture and chemical corrosion

Technical data

Material composition	Q235B or better steel
Surface finish	Hot-dip galvanized - for outdoor use

Threaded Fixation Plate - Outdoor

Item designation	Technical data	Sales pack quantity	Item number	
MT-FP M6 OC	Outdoor, low to moderate pollution (C3 / C4 - low)	100 pc	**2273654**	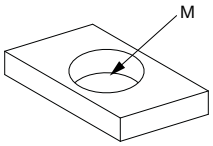
MT-FP M8 OC		100 pc	**2273656**	
MT-FP M10 OC		100 pc	**2273658**	
MT-FP M12 OC		100 pc	**2273670**	
MT-FP M16 OC		100 pc	**2273672**	

6

MT Media Fixation For Open C-Channels

Threaded Fixation Plate

Operation Instruction

MT-FP / MT-FP OC

2298189-07.2020

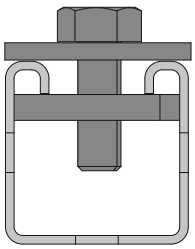

size	Torque (Nm)
M6	5
M8	9
M10	15
M12	20
M16	20

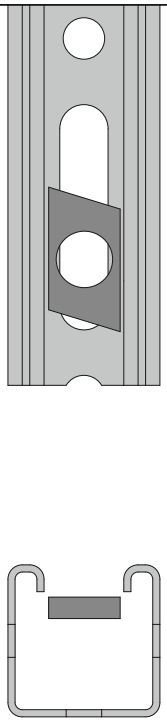

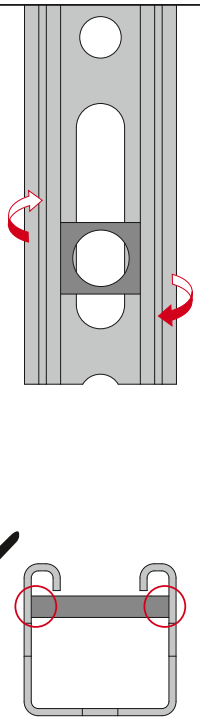

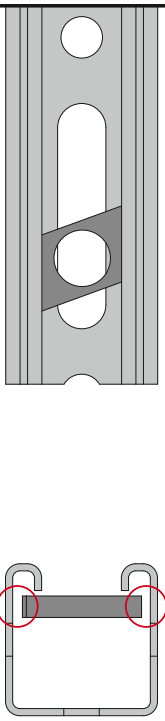

The latest IFU (Instruction For Use) is available on Hilti Online. Please check for any revisions before installing the product.

MT Media Fixation For Open C-Channels

Washer - Outdoor

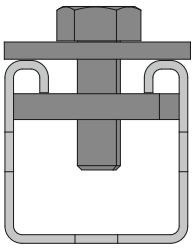

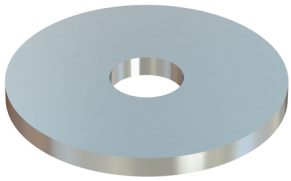

Applications

- Assembling C-trapeze for piping supports

Advantages

- Part of the Hilti MT system – an economical, all-in-one solution for virtually all modular MEP support structures
- Versatile solution for fastening pipe rings to the open face of MT C-Channels using MT-FP threaded plates

Technical data

Material composition	Q235 or better steel
Surface finish	Outdoor Coated - HDG

MT-ZW M8 / M10 / M12 / M16 OC Washer - Outdoor

Order Designation	Weight	Technical data	Sales pack quantity	Item number	
MT-ZW M8 OC	2 g	Outdoor, low to moderate pollution (C3 / C4 - low)	100 pc	**2283114**	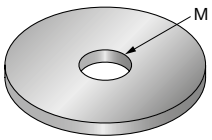
MT-ZW M10 OC	4 g		100 pc	**2283115**	
MT-ZW M12 OC	6 g		100 pc	**2283116**	
MT-ZW M16 OC	11 g		100 pc	**2283117**	

MT Media Fixation For Open C-Channels

U-bolt Fixation Angle

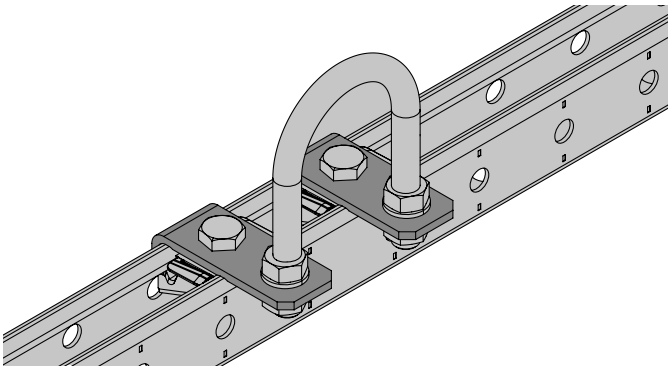

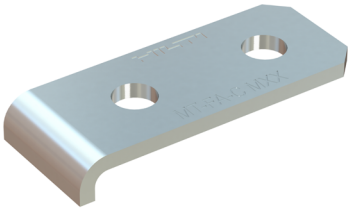

Applications

- Attaching MEP media to MT C-Channels
- Suitable for use in dry, indoor environments

Advantages

- Part of the Hilti MT system – an economical, all-in-one solution for virtually all modular MEP support structures
- Easy to install – compatible with the Hilti MT Twist-Lock, a faster alternative to spring nuts for assembling a modular support system
- Simple media fixation method

Technical data

Material composition	Q235B or better steel
Surface finish	Pre-galvanized - for dry indoor use only

MT-FA-C M8 / M10 / M12 / M16 U-bolt Fixation Angle

Order designations	Technical data	Sales pack quantity	Item number	
MT-FA-C M8	Dry indoor conditions (C1) Indoor with temporary condensation (C2)	20 pc	**2273686**	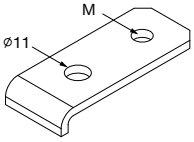
MT-FA-C M10		20 pc	**2273688**	
MT-FA-C M12		20 pc	**2273690**	
MT-FA-C M16		20 pc	**2273692**	

MT Media Fixation For Open C-Channels

U-bolt Fixation Angle - Outdoor

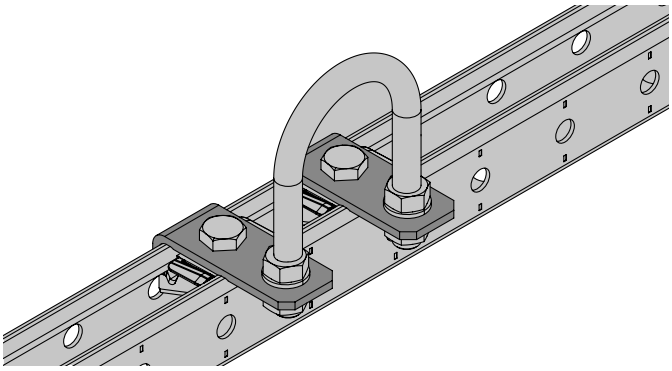

Applications

- Attaching MEP media to MT C-Channels
- Suitable for use in moderately corrosive environments

Technical data

Material composition	Q355B or better steel
Surface finish	Hot-dip galvanized - for outdoor use

Advantages

- Part of the Hilti MT system – an economical, all-in-one solution for virtually all modular MEP support structures
- Easy to install – compatible with the Hilti MT Twist-Lock, a faster alternative to spring nuts for assembling a modular support system
- Simple media fixation method

MT-FA-C OC U-bolt Fixation Angle

Order designation	Technical data	Sales pack quantity	Item number	
MT-FA-C M8 OC	Outdoor, low to moderate pollution (C3 / C4 - low)	20 pc	**2273687**	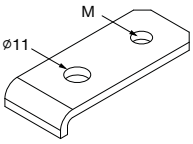
MT-FA-C M10 OC		20 pc	**2273689**	
MT-FA-C M12 OC		20 pc	**2273691**	
MT-FA-C M16 OC		20 pc	**2273652**	

6

MT Media Fixation For Open C-Channels

U-bolt Fixation Angle

Operation Instruction

MT-FA-C M8/M10/M12/M16 / MT-FA-C M8/M10/M12/M16 OC

2294628-07.2020

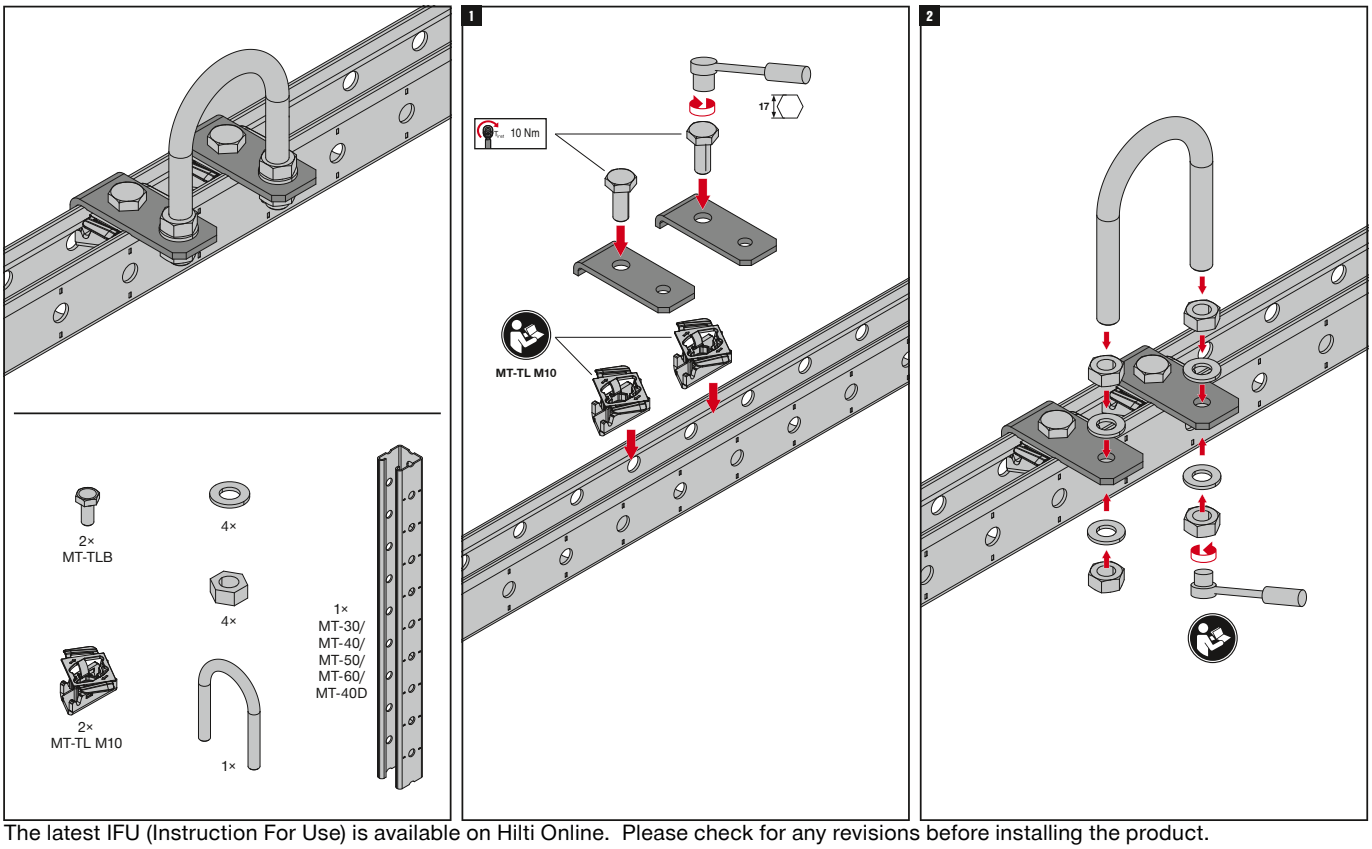

The latest IFU (Instruction For Use) is available on Hilti Online. Please check for any revisions before installing the product.

MT-AS B OC Pipe ring saddle

Pipe ring saddle for connecting threaded components to MT C-Channels, in moderately corrosive environments

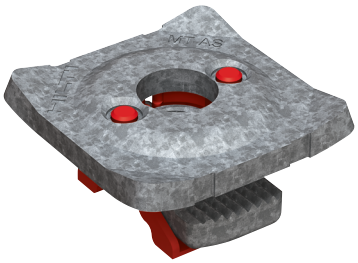

Technical data

Material composition	High Strength Steel
Surface finish	Outdoor Coated - Multilayer

Applications

- Attaching MEP media (hardware) to MT C-Channel profiles when shear load resistance is required
- Multidisciplinary MEP support structures combining a wide range of media such as air ducts, cable trays, piping, etc.
- Process piping for energy and industry applications
- Ceiling-mounted MEP support structures with heavy loads such as ceiling grids and utility piping and drainage
- Integrated modules and skids to support industrial pipes and other heavy-duty building services
- Floor-mounted MEP support structures with heavy loads
- Wall-mounted MEP support structures for heavy-duty, industrial pipes
- Assembling support structures for instrumentation and stands
- Suitable for use in moderately corrosive environments

Advantages

- Fewer work steps – faster installations in under three work steps and serrated design to help pre-secure connecting elements for better handling
- Simple to adjust – can be inserted and adjusted at any point along the profile, with 2.5 mm (1/8”) incremental adjustments
- Reliable installations – approved for shear loads for secure connections
- Part of the Hilti MT System – an economical, all-in-one solution for virtually all modular MEP support structures
- Corrosion resistance – hot-dip galvanized to help protect against moisture and chemical corrosion

MT-AS B OC Pipe ring saddle

Order Designation	Technical data	Sales pack quantity	Item number	
MT-AS B M12 OC	Outdoor, low to moderate pollution (C3 / C4 - low)	25 pcs	**2430772**	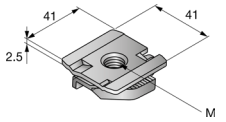
MT-AS B M16 OC		25 pcs	**2430773**	

MT-AS Pipe clamp saddle

Pipe clamp saddle for connecting threaded components to MT Channels

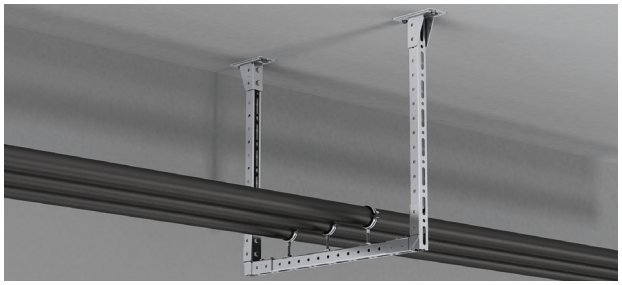

Applications

- Fastening pipes to MEP support structures
- Fastening air ducts to MEP support systems
- Recommended for use in dry, interior environments

Advantages

- Quick connection of threaded components to the open side of MT C-Channels
- Easy installation and positioning within MT C-Channel openings
- Single, compact part – for higher productivity and flexibility
- Various thread sizes available
- Robust single-part design without plastic components

Technical data

Material composition	DD11 MOD
Surface finish	Indoor-coated Electro-galvanized

MT-AS M8 Pipe Ring Saddle

Order Designation	Material composition	Technical data	Sales pack quantity	Item number	
MT-AS M8	S235JR, DD11 MOD	Dry indoor conditi-ons (C1) Indoor with temporary conden-sation (C2)	50 pc	**2399684**	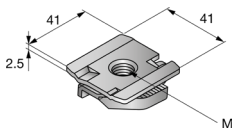
MT-AS M10	S235JR, DD11 MOD		50 pc	**2399685**	

MT-AS Pipe clamp saddle - Outdoors

Galvanized pipe clamp saddle for connecting threaded components to MT Channels

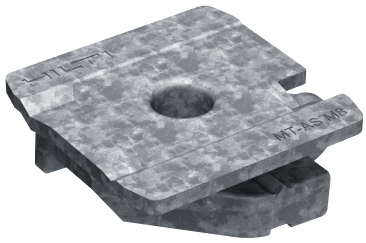

Applications

- Fastening pipes to MEP support structures
- Fastening air ducts to MEP support systems
- Suitable for use in moderately corrosive environments

Advantages

- Quick connection of threaded components to the open side of MT C-Channels
- Easy installation and positioning within MT C-Channel openings
- Single, compact part – for higher productivity and flexibility
- Corrosion resistance – hot-dip galvanized to help protect against moisture and chemical corrosion
- Various thread sizes available
- Robust single-part design without plastic components

Technical data

Material composition	DD11 MOD
Surface finish	Galvanized

MT-AS OC Pipe Ring Saddle - Outdoors

Order Designation	Material composition	Technical data	Sales pack quantity	Item number	
MT-AS M8 OC	S235JR, DD11 MOD	Outdoor, low to moderate pollution (C3 / C4 - low)	50 pc	**2399686**	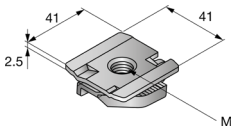
MT-AS M10 OC	S235JR, DD11 MOD		50 pc	**2399687**	

Technical data Pipe Ring Saddle

Item image	Load drawing	Order Designation	+ Fx	- Fx	+ Fy	- Fy	+ Fz	- Fz
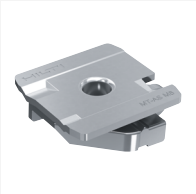	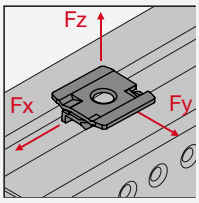	**MT-AS M8 / MT-AS M8 OC**	--	--	--	--	4,2 kN	4,2 kN
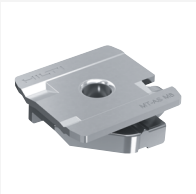	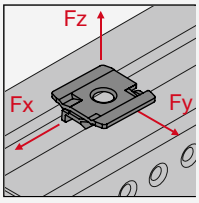	**MT-AS M10 / MT-AS M10 OC**	1,0 kN	1,0 kN	--	--	4,2 kN	4,2 kN

Design notes
- Shown load values are recommended values with partial safety factors for actions and resistance included
- Design value = 1.4 * recommended value
- The design resistance of the products is defined in accordance with EN1993

MT-HL OC Wing nuts

Wing nut for connecting threaded elements directly to MT box profiles in moderately corrosive environments

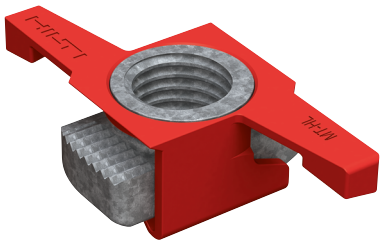

Technical data

Material composition	High Strength Steel
Surface finish	Outdoor Coated - Multilayer

Applications

- Attaching MEP media (hardware) to MT C-Channel profiles when shear load resistance is required
- Multidisciplinary MEP support structures combining a wide range of media such as air ducts, cable trays, piping, etc.
- Process piping for energy and industry applications
- Ceiling-mounted MEP support structures with heavy loads such as ceiling grids and utility piping and drainage
- Integrated modules and skids to support industrial pipes and other heavy-duty building services
- Floor-mounted MEP support structures with heavy loads
- Wall-mounted MEP support structures for heavy-duty, industrial pipes
- Assembling support structures for instrumentation and stands
- Suitable for use in moderately corrosive environments

Advantages

- Fewer work steps – faster installations in under three work steps and serrated design to help pre-secure connecting elements for better handling
- Simple to adjust – can be inserted and adjusted at any point along the profile, with 2.5 mm (1/8”) incremental adjustments
- Reliable installations – approved for shear loads for secure connections
- Part of the Hilti MT System – an economical, all-in-one solution for virtually all modular MEP support structures
- Corrosion resistance – hot-dip galvanized to help protect against moisture and chemical corrosion

MT-HL OC Wing nuts

Order Designation	Technical data	Sales pack quantity	Item number	
MT-HL M10 OC	Outdoor, low to moderate pollution (C3 / C4 - low)	25 pcs	**2430774**	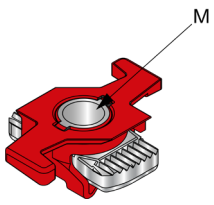
MT-HL M16 OC		25 pcs	**2431072**	
MT-HL 1/2 OC		25 pcs	**2431081**	
MT-HL M12 OC		25 pcs	**2431090**	
MT-HL 3/8 OC		25 pcs	**2431091**	

Technical data MT-HL OC

Item image	Load drawing	Order Designation	Torque	+ Fz	Fx
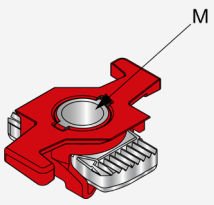	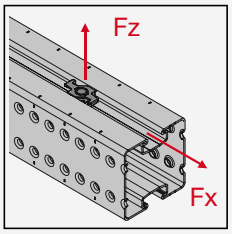	**MT-HL M10 OC**	40 Nm	11,5 kN	3,0 kN
		MT-HL M12 OC	84 Nm	11,5 kN	4,2 kN
		MT-HL M16 OC	84 Nm	11,5 kN	4,7 kN

MT Box Profiles Connectors

Operation Instruction
MT-AS

2436864-04.2024

	SW	T_{inst}	L_{min}
M12	19 mm	31 Nm (24ft-lb)	20 mm
M16	24 mm	40 Nm (30ft-lb)	23 mm

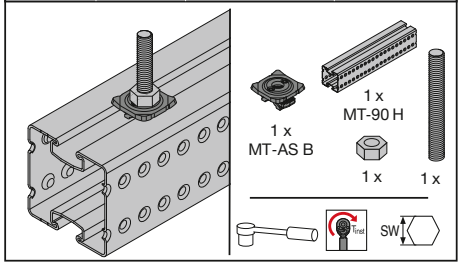

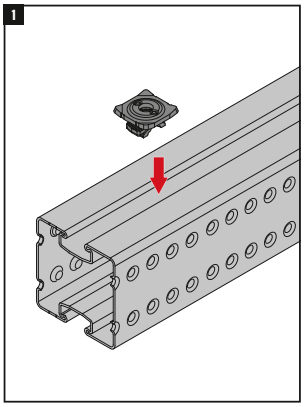

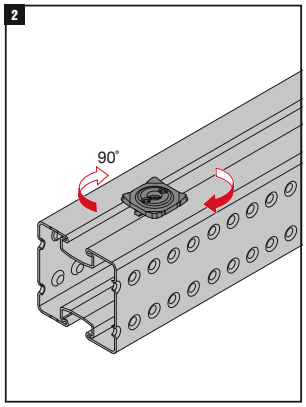

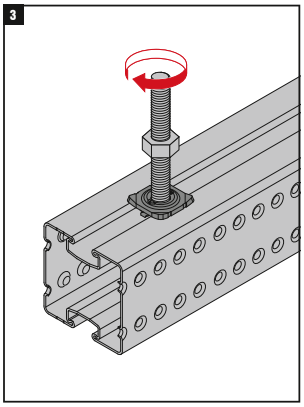

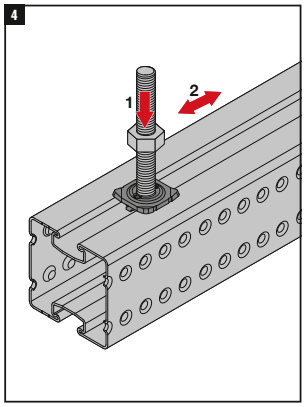

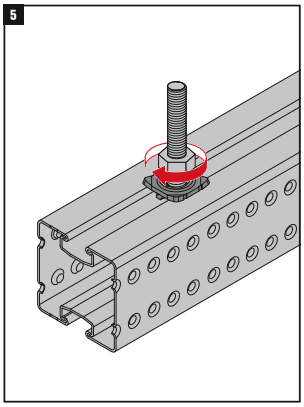

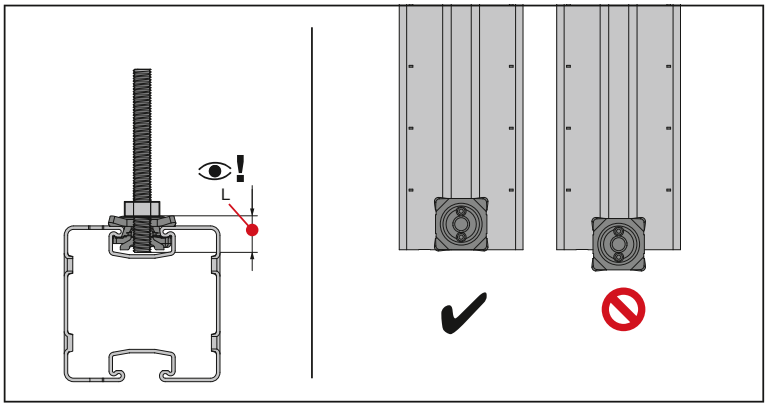

The latest IFU (Instruction For Use) is available on Hilti Online. Please check for any revisions before installing the product.

Operation Instruction
MT-HL OC

2436648-04.2024

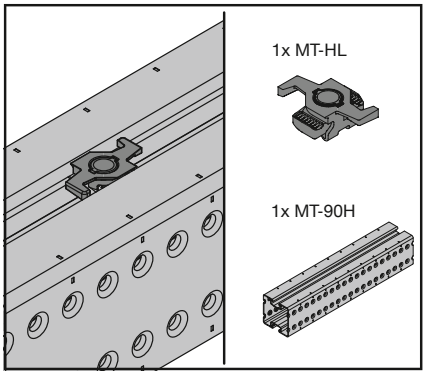

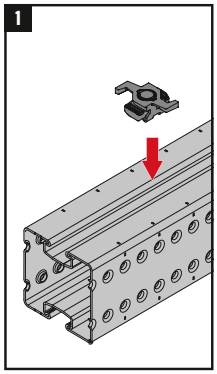

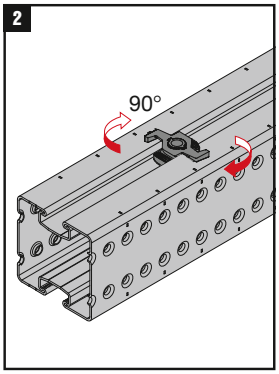

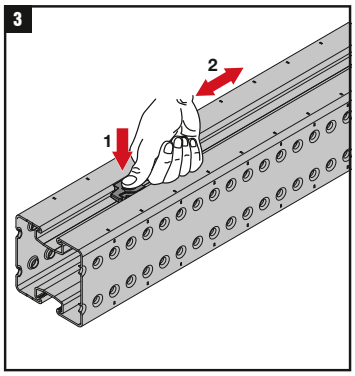

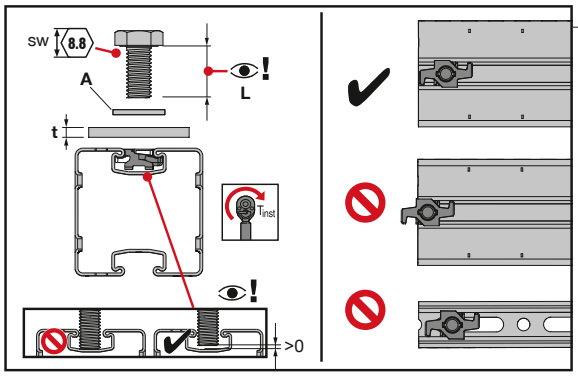

	A	8.8	T_{inst}	t (mm)	L (mm)
M10	A 10.5/ 20-F	17 mm	40 Nm (30 ft/ lb)	1	20
				2	
				3	22
				4	
				5	
M12	A 13/ 24-F	19 mm	84 Nm (62 ft/ lb)	3	22
				4	
				5	
				6	25
				7	
				8	
M16	A 17/ 30-F	24 mm	84 Nm (62 ft/ lb)	5	25
				6	
				7	
				8	28
				9	
				10	30
				11	
				12	

The latest IFU (Instruction For Use) is available on Hilti Online. Please check for any revisions before installing the product.

MT Media Fixation For Box Profiles

U-bolt Fixation Angle - Outdoor

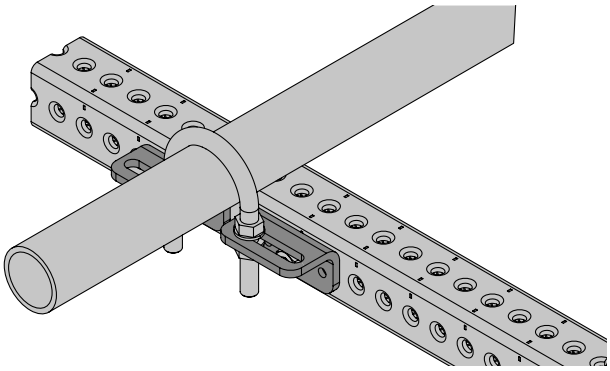

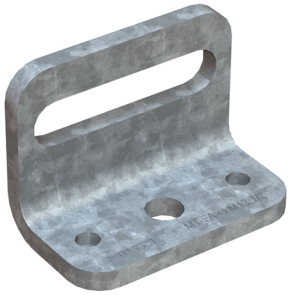

Applications

- Attaching MEP media to MT box profiles
- Suitable for use in moderately corrosive environments

Advantages

- Part of the Hilti MT system – an economical, all-in-one solution for virtually all modular MEP support structures
- Easy to install – one-step fastening using Hilti MT-TFB thread-forming bolts
- Simple media fixation method

Technical data

Material composition	Q235B or better steel
Surface finish	Hot-dip galvanized - for outdoor use

MT-FA-G OC Box Profile U-bolt Fixation Angle - Outdoor

Order Designation	Technical data	Sales pack quantity	Item number	
MT-FA-G M10 3/8 OC	Outdoor, low to moderate pollution (C3 / C4 - low)	10 pc	**2273681**	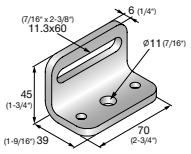
MT-FA-G M12 1/2 OC		10 pc	**2273682**	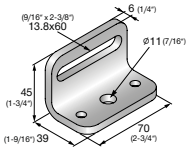
MT-FA-G M16 5/8 OC		10 pc	**2273683**	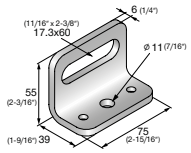
MT-FA-G M22 7/8 OC		10 pc	**2273684**	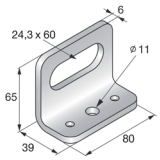
MT-FA-G M24 1 OC		10 pc	**2273685**	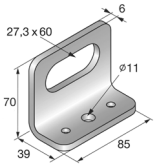

6

MT Media Fixation For Box Profiles

U-bolt Fixation Angle - Outdoor

Operation Instruction

MT-FA-G OC

2294698-07.2020

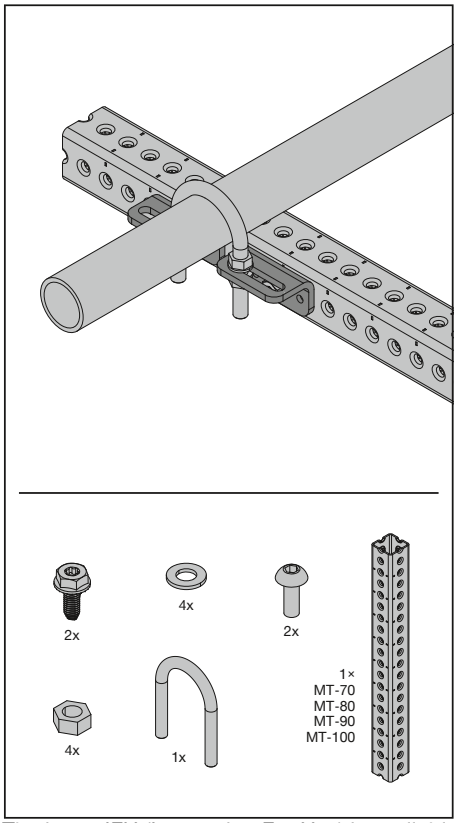

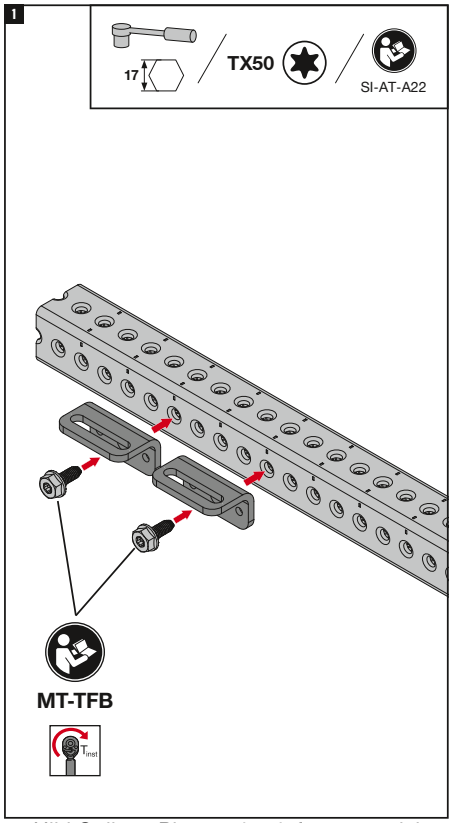

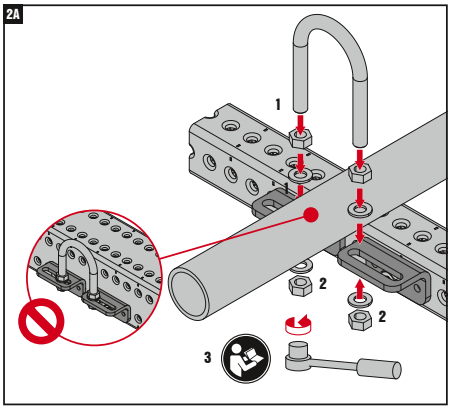

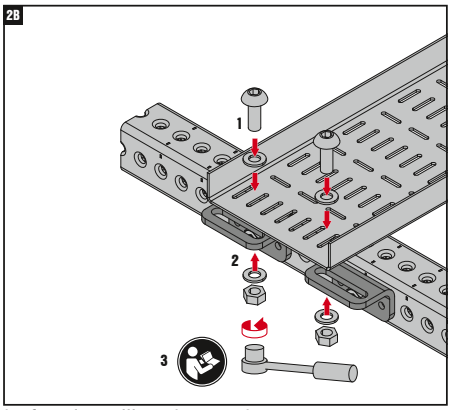

The latest IFU (Instruction For Use) is available on Hilti Online. Please check for any revisions before installing the product.

MT Media Fixation For Box Profiles

Sliding Axial Guide Pipe Shoe Fixation - Outdoor

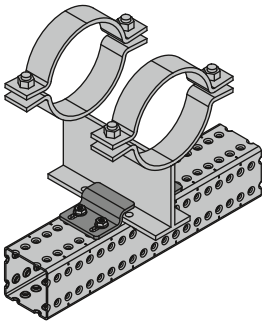

Applications

- Fastening MP-PS pipe shoes to MT box profiles restricting the movement to an axial sliding
- Recommended for use in Indoor or Outdoor with low to moderate pollution (C3)

Advantages

- Easier to install – slotted anchor holes to simplify pipe shoe positioning and fastening
- Adaptable – suitable for any size and configuration of Hilti MP pipe shoe
- Safer jobsites – avoid welding and drilling

Technical data

Material composition	S280GD+ZM300
Surface finish	Outdoor Coated - ZM

MT-FPS-SF / SZ1 / SZ2 OC Sliding Axial Guide Pipe Shoe Fixation - Outdoor

Order Designation	Weight	Technical data	Sales pack quantity	Item number	
MT-FPS-SF OC	0,27 kg	Outdoor, low to moderate pollution (C3 / C4 - low)	8 pc	**2330920**	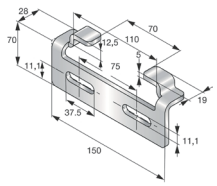
MT-FPS-SZ1 OC	0,18 kg		12 pc	**2331078**	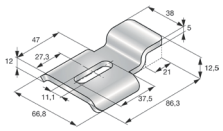
MT-FPS-SZ2 OC	0,26 kg		10 pc	**2331079**	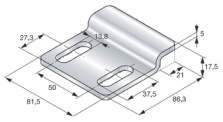

6

MT Media Fixation For Box Profiles

Sliding Axial Guide Pipe Shoe Fixation - Outdoor

Operation Instruction

MT-FPS-GS OC / MT-FPS-GL OC

2334620-03.2022

1

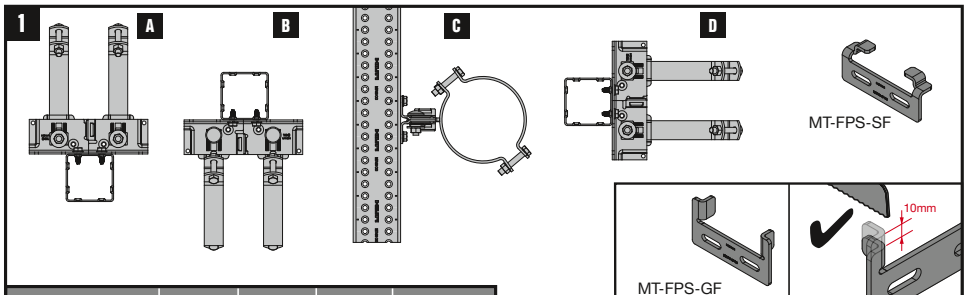

	MT-TFB	MT-TFB	MT-TFB	MT-TLB
	MT-70 / MT-80 S	MT-80 / MT-90	MT-100	MT-U-GL1
MT-FPS-SF	A-D	A-D	A-D*	A
MT-FPS-GF	A	A	A*	A

*without 1-1

	MT-FPS-GF OC	
MP-PS 1-1	ok	ok
MP-PS 2-2	ok	ok
MP-PS L4-2	-	ok
MP-PS M4-2	-	ok
MP-PS H4-2	ok	ok

2A

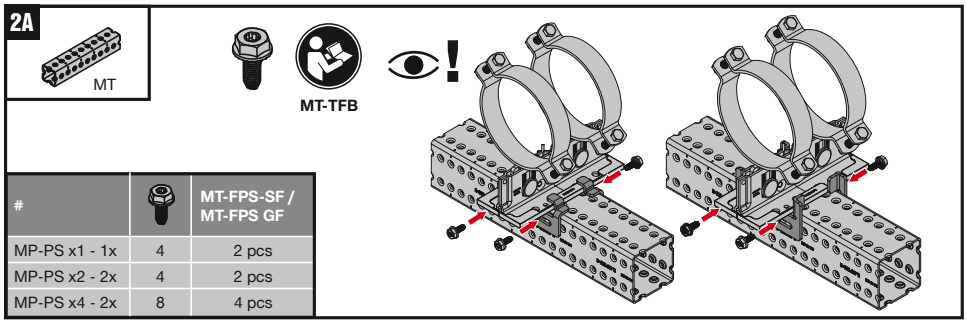

#		MT-FPS-SF / MT-FPS GF
MP-PS x1 - 1x	4	2 pcs
MP-PS x2 - 2x	4	2 pcs
MP-PS x4 - 2x	8	4 pcs

2B

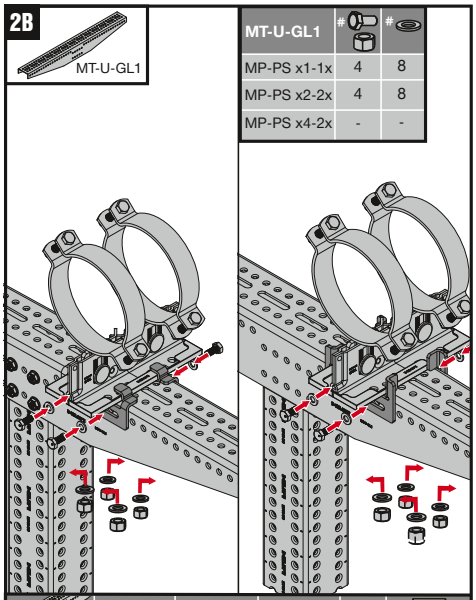

MT-U-GL1	#	#
MP-PS x1-1x	4	8
MP-PS x2-2x	4	8
MP-PS x4-2x	-	-

MT-U-GL1	MT-TLB OC	M10-SL OC	A 10.5/20-F	17	20 Nm (14.75 ft-lb)
	M10x25-F	M10-F	A 10.5/20-F	17	20 Nm (14.75 ft-lb)

3

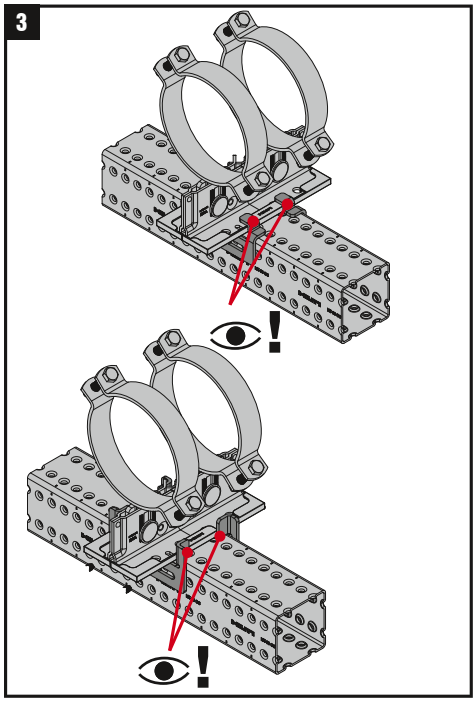

4

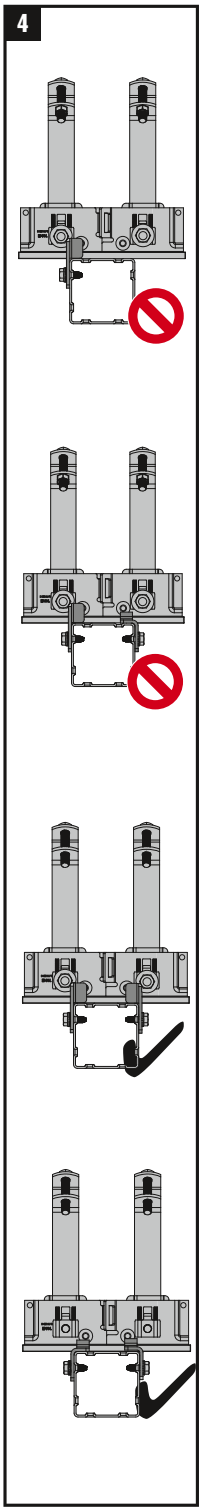

The latest IFU (Instruction For Use) is available on Hilti Online. Please check for any revisions before installing the product.

MT Media Fixation For Box Profiles

Plain Guide Allowing Uplift Pipe Shoe Fixation - Outdoor

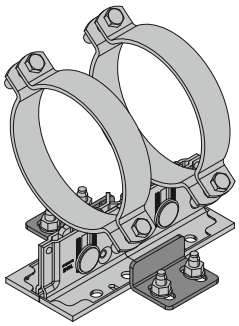

Applications

- Fastening MP-PS pipe shoes to MT box profiles restricting the movement to axial sliding and vertical lifting
- Recommended for use in Indoor or Outdoor with low to moderate pollution (C3)

Advantages

- Easier to install – slotted anchor holes to simplify pipe shoe positioning and fastening
- Adaptable – suitable for any size of Hilti MP pipe shoe in stand-up configuration
- Safer jobsites – avoid welding and drilling

Technical data

Material composition	S280GD+ZM300
Surface finish	Outdoor Coated - ZM

MT-FPS-GF / GL1 / GL2 OC Plain Guide Allowing Uplift Pipe Shoe Fixation - Outdoor

Order Designation	Weight	Technical data	Sales pack quantity	Item number	
MT-FPS-GF OC	0,30 kg	Outdoor, low to moderate pollution (C3 / C4 - low)	8 pc	**2330921**	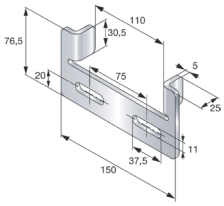
MT-FPS-GL1 OC	0,18 kg		12 pc	**2331080**	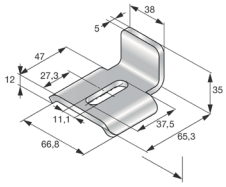
MT-FPS-GL2 OC	0,26 kg		10 pc	**2331081**	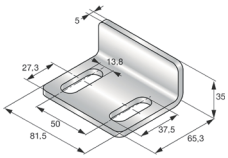

6

MT Media Fixation For Box Profiles

Plain Guide Allowing Uplift Pipe Shoe Fixation - Outdoor

Operation Instruction

MT-FPS SZx OC SET / MT-FPS GLx OC SET

2334219-08.2021

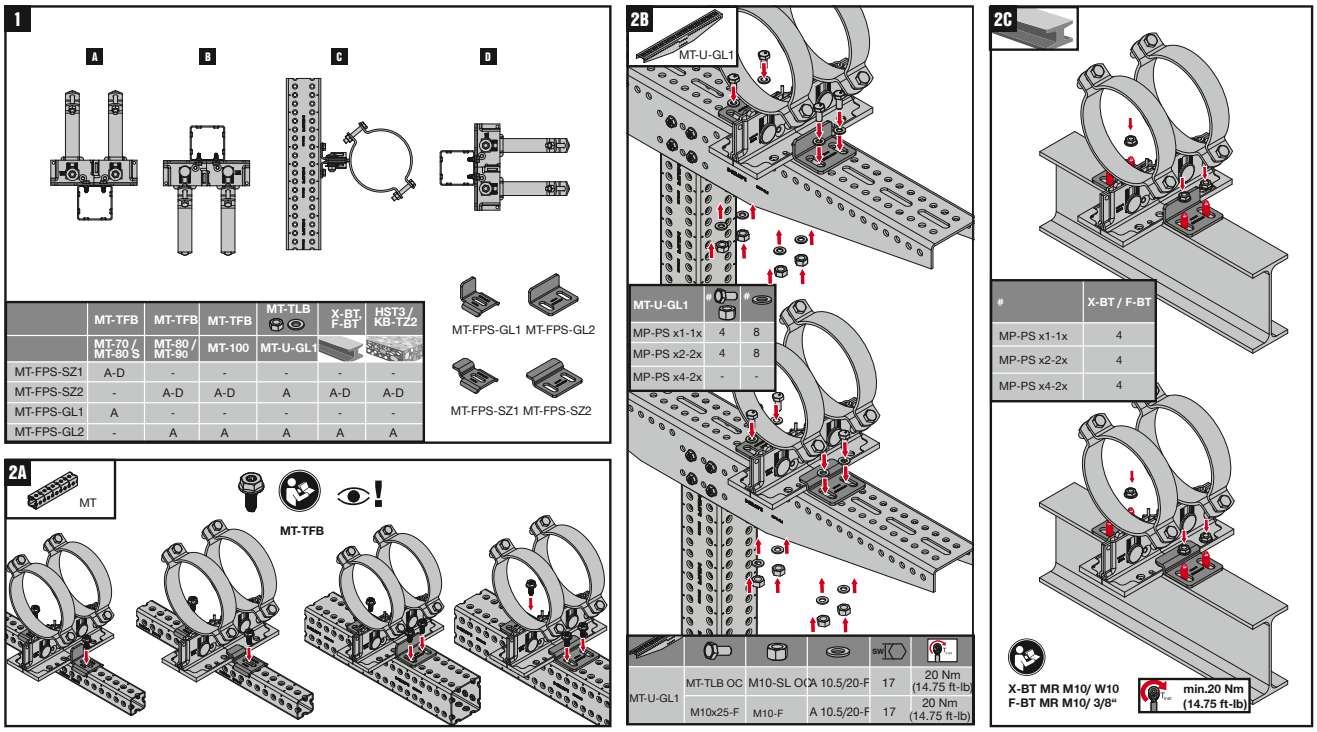

	MT-TFB	MT-TFB	MT-TFB	MT-TLB	X-BT, F-BT	HST3 / KB-TZ2
	MT-70 / MT-80 S	MT-80 / MT-90	MT-100	MT-U-GL1		
MT-FPS-SZ1	A-D	-	-	-	-	-
MT-FPS-SZ2	-	A-D	A-D	A	A-D	A-D
MT-FPS-GL1	A	-	-	-	-	-
MT-FPS-GL2	-	A	A	A	A	A

MT-U-GL1	#	#
MP-PS x1-1x	4	8
MP-PS x2-2x	4	8
MP-PS x4-2x	-	-

				SW	
MT-U-GL1	MT-TLB OC	M10-SL OC	A 10.5/20-F	17	20 Nm (14.75 ft-lb)
	M10x25-F	M10-F	A 10.5/20-F	17	20 Nm (14.75 ft-lb)

#	X-BT / F-BT
MP-PS x1-1x	4
MP-PS x2-2x	4
MP-PS x4-2x	4

2334219-08.2021

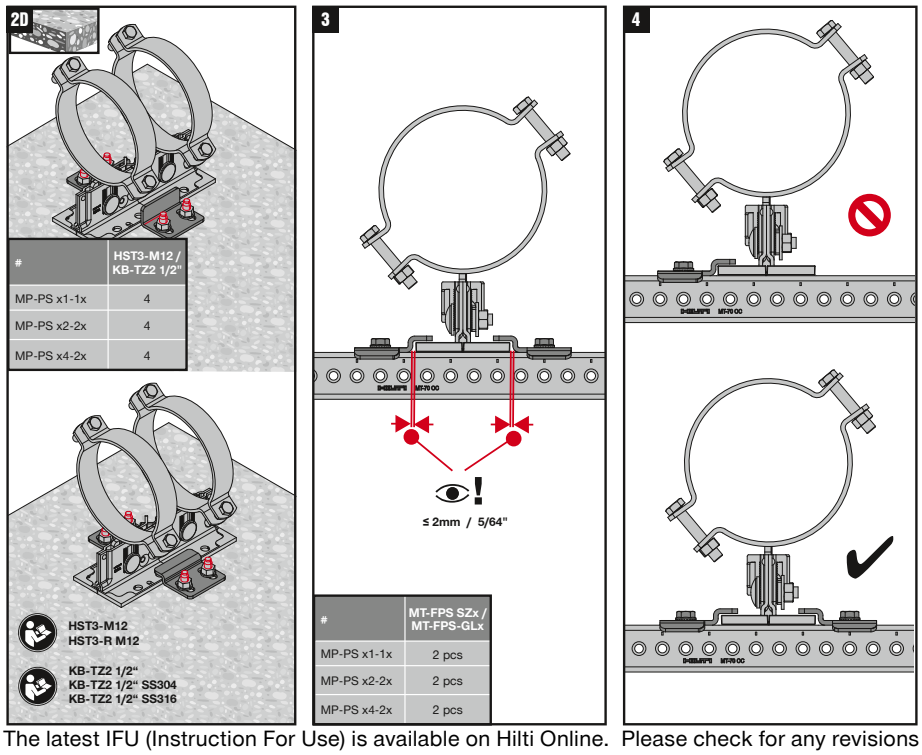

#	HST3-M12 / KB-TZ2 1/2"
MP-PS x1-1x	4
MP-PS x2-2x	4
MP-PS x4-2x	4

#	MT-FPS SZx / MT-FPS-GLx
MP-PS x1-1x	2 pcs
MP-PS x2-2x	2 pcs
MP-PS x4-2x	2 pcs

The latest IFU (Instruction For Use) is available on Hilti Online. Please check for any revisions before installing the product.

6

MT Media Fixation For Box Profiles

Plain Guide Allowing Uplift Pipe Shoe Fixation - Outdoor

Operation Instruction

MT-FPS SF OC SET / MT-FPS GF OC SET

2334620-03.2022

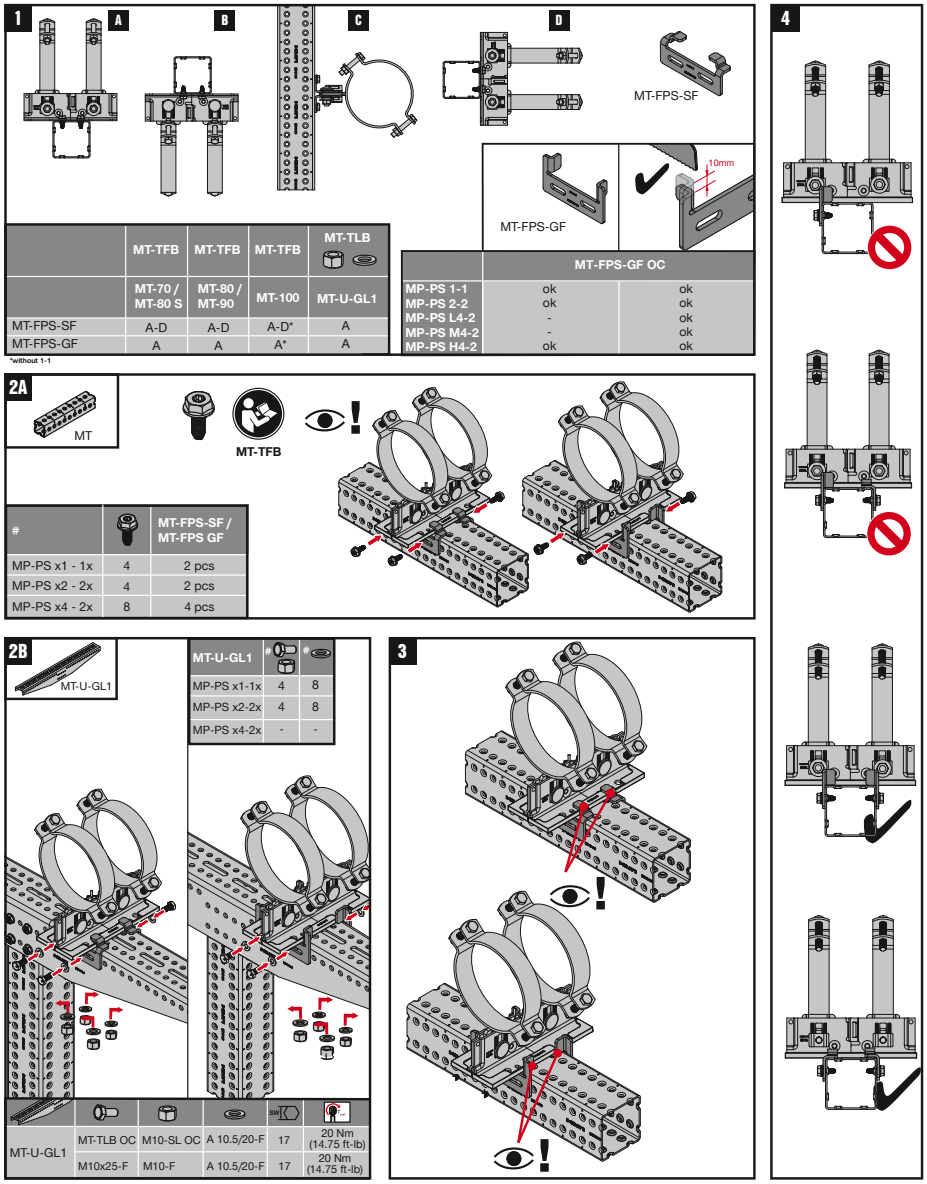

	MT-TFB	MT-TFB	MT-TFB	MT-TLB
	MT-70 / MT-80 S	MT-80 / MT-90	MT-100	MT-U-GL1
MT-FPS-SF	A-D	A-D	A-D*	A
MT-FPS-GF	A	A	A*	A

*without 1-1

	MT-FPS-GF OC	
MP-PS 1-1	ok	ok
MP-PS 2-2	ok	ok
MP-PS L4-2	-	ok
MP-PS M4-2	-	ok
MP-PS H4-2	ok	ok

#		MT-FPS-SF / MT-FPS GF
MP-PS x1 - 1x	4	2 pcs
MP-PS x2 - 2x	4	2 pcs
MP-PS x4 - 2x	8	4 pcs

MT-U-GL1	#	#
MP-PS x1-1x	4	8
MP-PS x2-2x	4	8
MP-PS x4-2x	-	-

MT-U-GL1	MT-TLB OC	M10-SL OC	A 10.5/20-F	17	20 Nm (14.75 ft-lb)
	M10x25-F	M10-F	A 10.5/20-F	17	20 Nm (14.75 ft-lb)

The latest IFU (Instruction For Use) is available on Hilti Online. Please check for any revisions before installing the product.

MT Media Fixation For Box Profiles

Fixed point Pipe Shoe Fixation - Outdoor

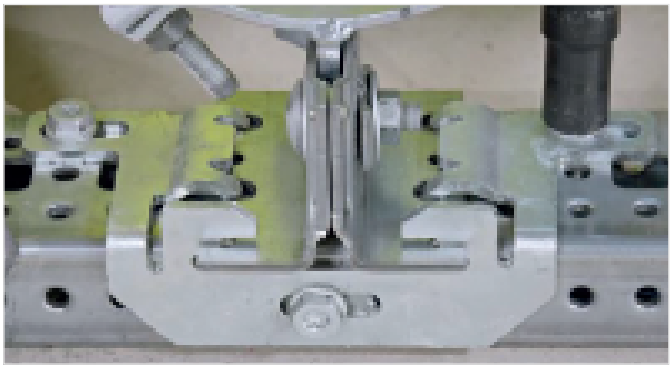

Applications

- Installing fixed points with MP-PS pipe shoes on Hilti MT modular box profiles
- Recommended for use in Indoor or Outdoor with low to moderate pollution (C3)

Advantages

- One-step installation – easy and quick fastening using Hilti MT thread-forming bolts
- Simpler method – suitable for single pipe clamp pipe shoes in combination with 100 or 150mm wide MT modular box profiles
- Safer jobsites – avoid welding and drilling

Technical data

Material composition	S235JR - Yield280
Surface finish	Outdoor Coated - HDG

MT-FPS-FZL OC Fixed Point Pipe Shoe Fixation - Outdoor

Order Designation	Weight	Technical data	Sales pack quantity	Item number	
MT-FPS-FZL OC	0,60 kg	Outdoor, low to moderate pollution (C3 / C4 - low)	2 pc	**2331077**	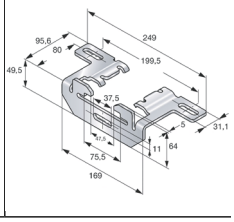

MT Media Fixation For Box Profiles

Fixed point Pipe Shoe Fixation - Outdoor

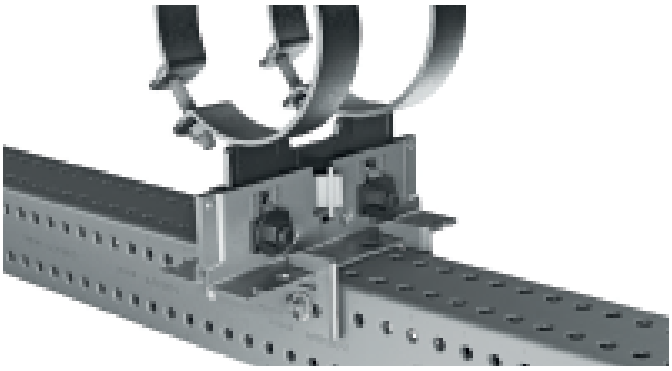

Applications

- Installing fixed points with MP-PS pipe shoes on Hilti MT modular box profiles
- Recommended for use in Indoor or Outdoor with low to moderate pollution (C3)

Advantages

- One-step installation – quicker and easier fastening using Hilti MT thread-forming bolts
- Simpler method – suitable for all double pipe clamp pipe shoes in combination with all available MT modular box profiles
- Safer jobsites – avoid welding and drilling

Technical data

Material composition	S280GD+ZM300
Surface finish	Outdoor Coated - ZM

MT-FPS-FF OC Fixed Point Pipe Shoe Fixation - Outdoor

Order Designation	Weight	Technical data	Sales pack quantity	Item number	
MT-FPS-FF OC	0,27 kg	Outdoor, low to moderate pollution (C3 / C4 - low)	8 pc	**2331076**	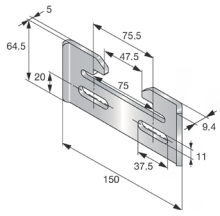

6

MT Media Fixation For Box Profiles

Fixed point Pipe Shoe Fixation - Outdoor

Operation Instruction

MT-FPS FZL OC / MT-FPS FF OC SET

2334481-08.2021

1

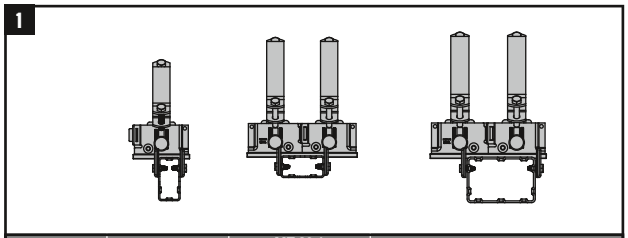

	MT-70 / MT-80 S	MT-80 / MT-90 / MT-100 S	MT-100
MP-PS x1-1x	2x MT-FPS FF OC	1x MT-FPS FZL OC	1x MT-FPS FZL OC
MP-PS x2-2x	2x MT-FPS FF OC	2x MT-FPS FF OC	2x MT-FPS FF OC + 4x A 10.5x30-F
MP-PS x4-2x	-	4x MT-FPS FF OC	4x MT-FPS FF OC + 8x A 10.5x30-F

2A

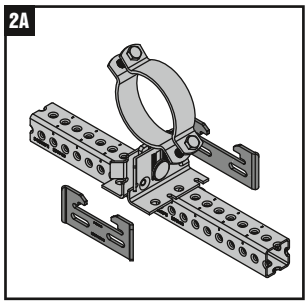

3A

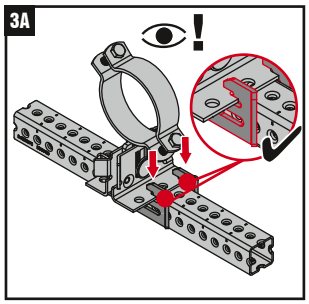

4A

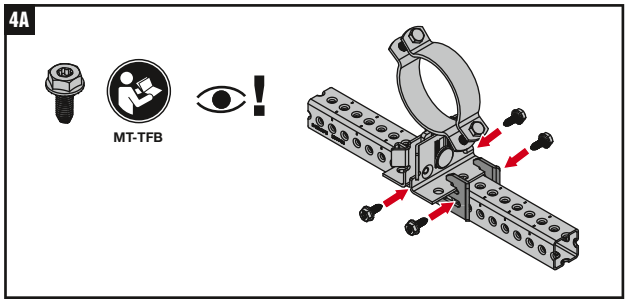

5A

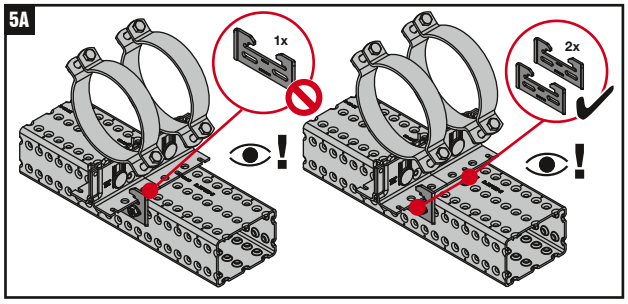

2B

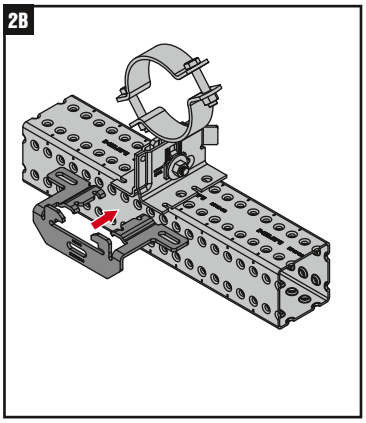

3B

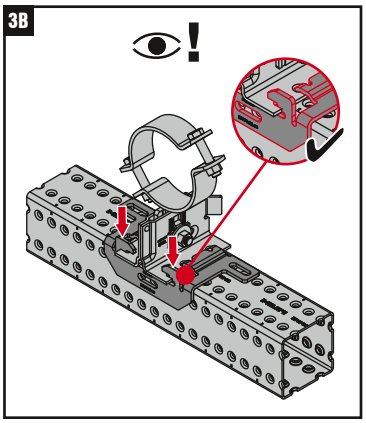

4B

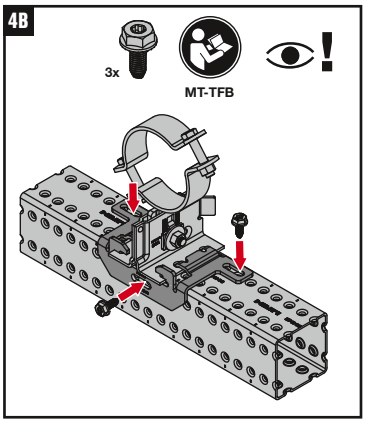

The latest IFU (Instruction For Use) is available on Hilti Online. Please check for any revisions before installing the product.

MT Media Fixation For Box Profiles

Pipe Connection Plate - Outdoor

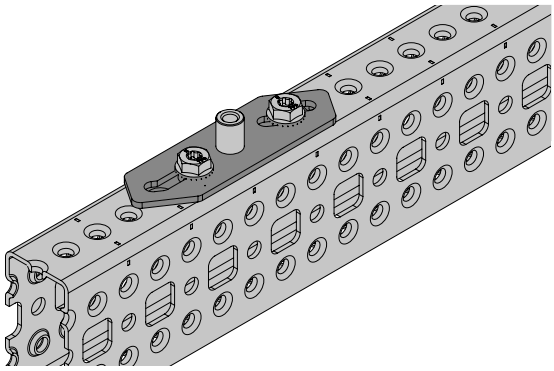

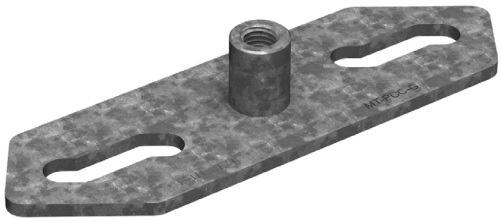

Applications

- Connecting pipe clamps directly to MT-70, MT-80, MT-90 and MT-100 box profiles
- Mounting medium/heavy-load pipes on trapeze
- Mounting medium/heavy-load pipes on wall brackets

Advantages

- Faster pipe clamp installation – attach a pipe clamp using just two thread forming bolts and an impact wrench with the Adaptive Torque module
- Full adjustability – easily install pipe clamps in the right position from M8 to M16
- Corrosion resistance – hot-dip galvanized to help protect against moisture and chemical corrosion

Technical data

Material composition	Q355 or better steel
Surface finish	Outdoor Coated - HDG

MT-PCC-G M8/M10 / M12 / M16 OC Pipe Connection Plate - Outdoor

Order Designation	Weight	Technical data	Sales pack quantity	Item number	
MT-PCC-G M8/M10 OC	134 g	Outdoor, low to moderate pollution (C3 / C4 - low)	10 pc	**2353801**	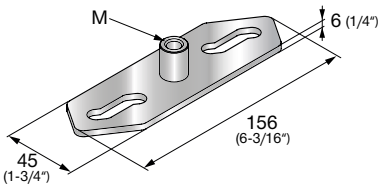
MT-PCC-G M12 OC	189 g		10 pc	**2354564**	
MT-PCC-G M16 OC	152 g		10 pc	**2354155**	

6

MT Media Fixation For Box Profiles

Pipe Connection Plate - Outdoor

Operation Instruction

MT-PCC-G OC

2359997-03.2022

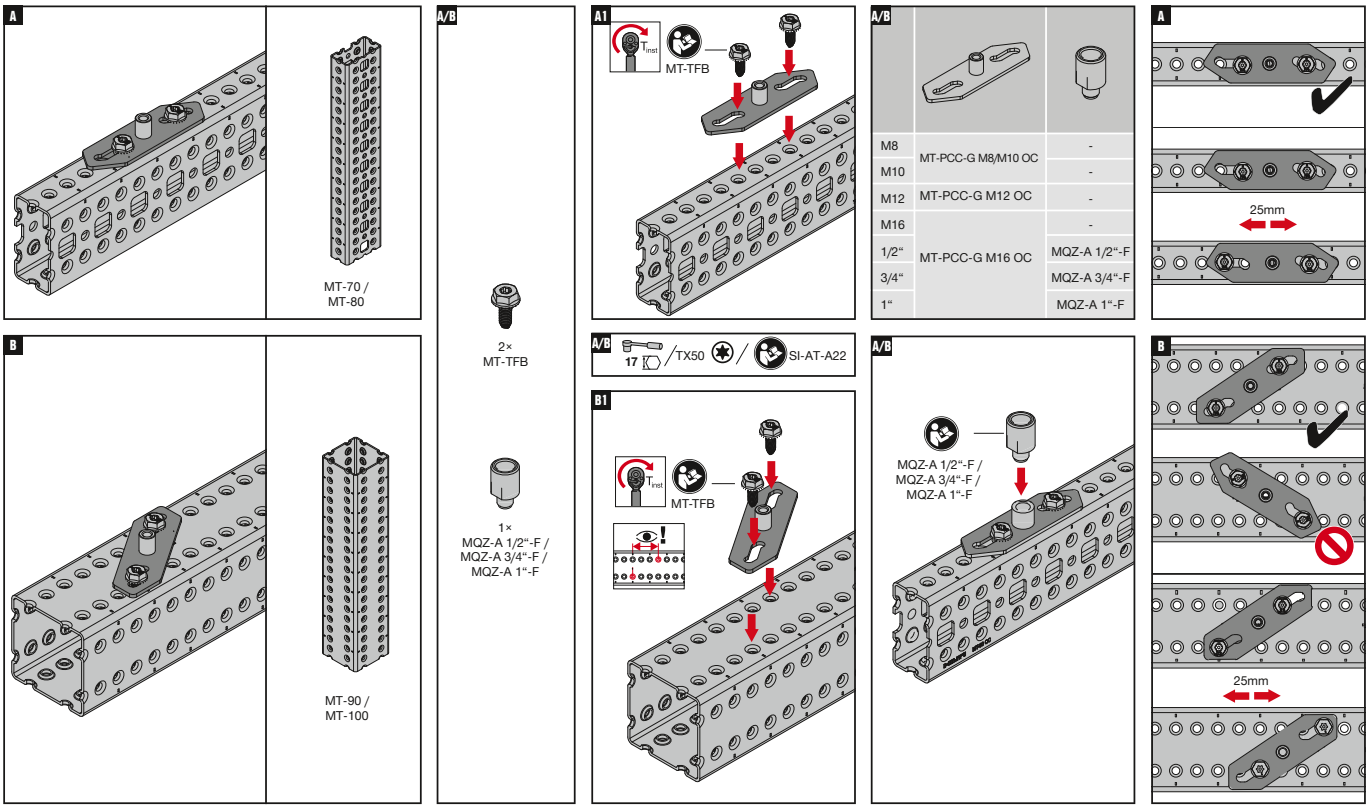

M8	MT-PCC-G M8/M10 OC	-
M10		-
M12	MT-PCC-G M12 OC	-
M16	MT-PCC-G M16 OC	-
1/2"		MQZ-A 1/2"-F
3/4"		MQZ-A 3/4"-F
1"		MQZ-A 1"-F

The latest IFU (Instruction For Use) is available on Hilti Online. Please check for any revisions before installing the product.

MT Beam Clamps

Beam Clamp Connections To Steel - Outdoor

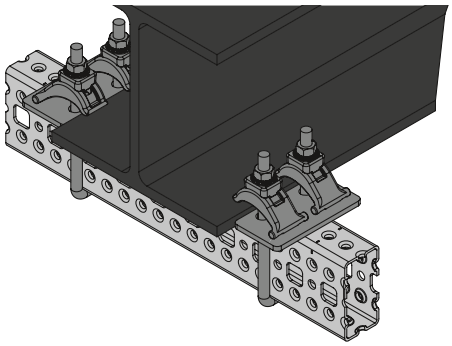

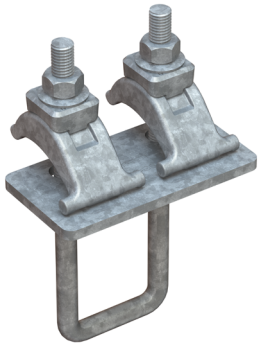

Applications

- Mounting MT-70 and MT-80 girders on structural steel
- Suitable for use in moderately corrosive environments

Advantages

- Part of the Hilti MT system – an economical, all-in-one solution for virtually all modular MEP support structures
- No drilling or hot works – fasten modular girders to structural steel without anchoring or welding
- Extensive software support – PROFIS Modular Support Engineering, the MEP Support Selector, Revit® families, and plug-ins for Staad Pro® and Smart 3D® are all available to streamline design and ordering

Technical data

Material composition	Q235 or better steel
Surface finish	Outdoor Coated - HDG

MT-BC-GS T OC Beam Clamp - Outdoor

Order Designation	Weight	Technical data	Sales pack quantity	Item number	
MT-BC-GS T OC	1275 g	Outdoor, low to moderate pollution (C3 / C4 - low)	12 pc	**2273587**	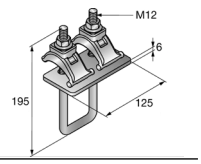

MT-BC-GXL T OC Beam Clamp - Outdoor

Order Designation	Weight	Technical data	Sales pack quantity	Item number	
MT-BC-GXL T OC	2116 g	Outdoor, low to moderate pollution (C3 / C4 - low)	10 pc	**2273589**	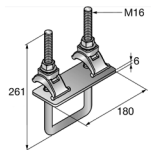

7

MT Beam Clamps
Beam Clamp Connections To Steel - Outdoor

Technical data Beam Clamp

Item image	Load drawing	Order Designation	+ Fz	- Fz	± Fx	± Fy
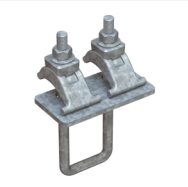	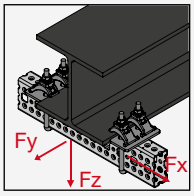	**MT-BC-GS T**	15,0 kN	15,0 kN	3,6 kN	2,5 kN
		MT-BC-GXL T	30,0 kN	30,0 kN	5,0 kN	6,0 kN

Design notes

- Shown load values are recommended values with partial safety factors for actions and resistance included
- Design value = 1.5 * recommended value
- The design resistance of the products is defined in accordance with EN1993
- Load values are only valid per pair.

Operation Instruction
MT-BC-GS T OC / MT-BC-GXL T OC

2298185-09.2020

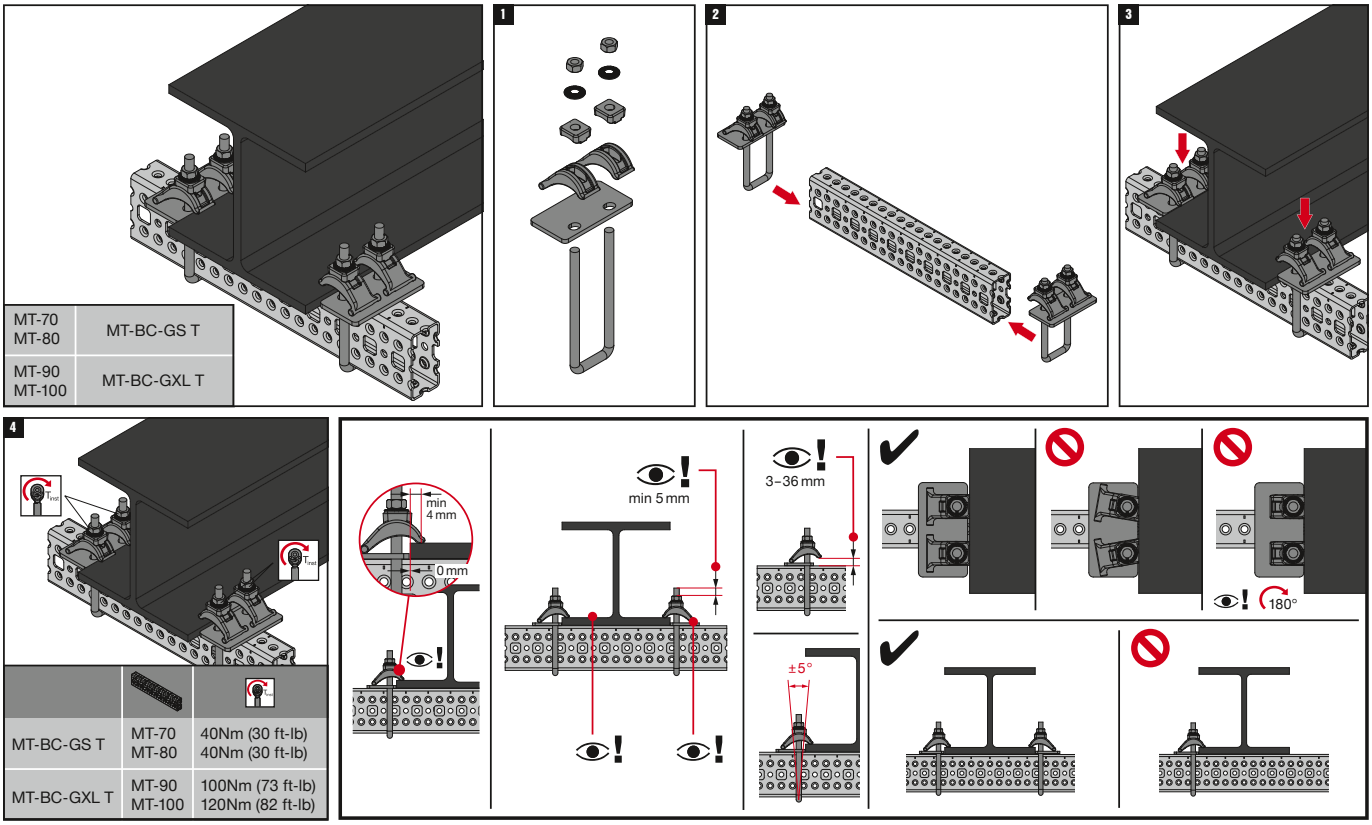

The latest IFU (Instruction For Use) is available on Hilti Online. Please check for any revisions before installing the product.

MT Profile End Caps
Open C-channels

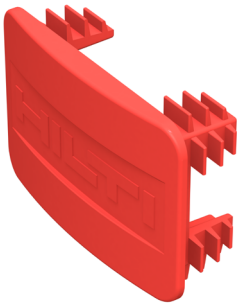

Applications

- Protecting strut channel edges from damage during storage and transport
- Covering any sharp edges left after cutting to size

Advantages

- Part of the Hilti MT system – an economical, all-in-one solution for virtually all modular MEP support structures
- Safer handling – protects installers from sharp edges which may be left after cutting the strut channel
- Improved durability – helps to prevent deformed edges during storage and transport around the construction site

Technical data

Material composition	PPB-M02
Surface finish	n/a

MT-EC-20 Channel End Cap

Order Designation	Weight	Sales pack quantity	Item number	
MT-EC-20	3 g	50 pc	**2282197**	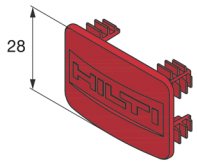

MT-EC-30 Channel End Cap

Order Designation	Weight	Sales pack quantity	Item number	
MT-EC-30	4 g	50 pc	**2273642**	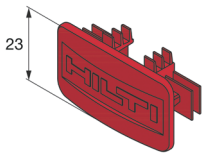

MT Profile End Caps
Open C-channels

MT-EC-40/50 Channel End Cap

Order Designation	Weight	Sales pack quantity	Item number	
MT-EC-40/50	6 g	50 pc	**2273643**	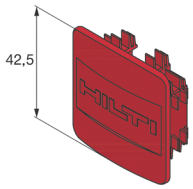

MT-EC-60 Channel End Cap

Order Designation	Weight	Sales pack quantity	Item number	
MT-EC-60	9 g	50 pc	**2273644**	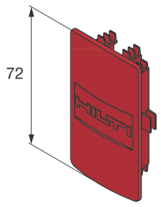

MT Profile End Caps
Box Profiles

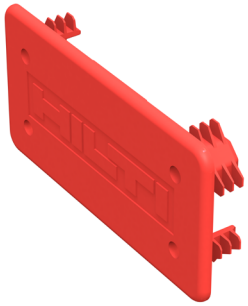

Applications

- Protecting MT-Box Profile edges from damage during storage and transport
- Covering any sharp edges left after cutting to size

Advantages

- Part of the Hilti MT system – an economical, all-in-one solution for virtually all modular MEP support structures
- Safer handling – protects installers from sharp edges which may be left after cutting the strut channel
- Improved durability – helps to prevent deformed edges during storage and transport around the construction site

Technical data

Material composition	PPB-M02
Surface finish	n/a

MT-EC-70 Box Profile End Cap

Order Designation	Weight	Sales pack quantity	Item number	
MT-EC-70	8 g	50 pc	**2273697**	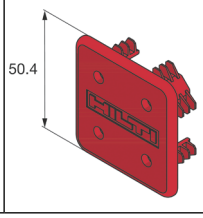

MT-EC-80 Box Profile End Cap

Order Designation	Weight	Sales pack quantity	Item number	
MT-EC-80	17 g	25 pc	**2273698**	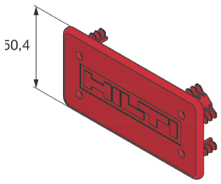

MT Profile End Caps
Box Profiles

MT-EC-90 Box Profile End Cap

Order designation	Weight	Sales pack Quantity	Item number	
MT-EC-90	31 g	25 pc	**2273699**	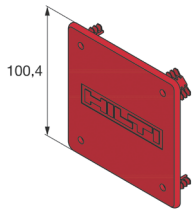

MT-EC-100 Box Profile End Cap

Order designation	Weight	Sales pack Quantity	Item number	
MT-EC-100	45 g	25 pc	**2273700**	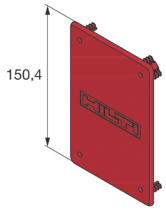

MT Profile Rubber Inlays

Open C-channels

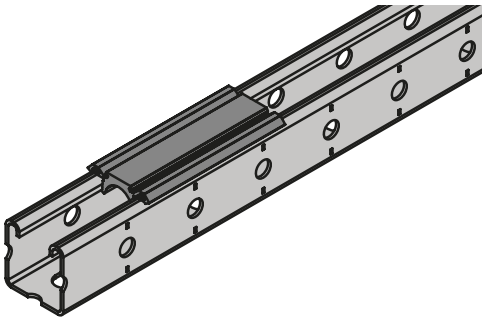

Applications

- Acoustic insulation of heating, ventilation, and air conditioning installations, such as rectangular air ducts

Advantages

- Improve acoustic insulation of HVAC installations – these inlays can deliver a significant noise reduction
- Easy to install – simply click into MT strut channels, no additional fasteners required. Can also be installed from the back of the open channels

Technical data

Material composition	EPDM
Surface finish	n/a

MT-RI Rubber Inlay

Order Designation	Weight	Sales pack quantity	Item number	
MT-RI 20 m	6924 g	1 pc	**2337452**	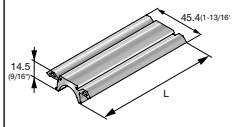
MT-RI 10 cm	35 g	100 pc	**2337453**	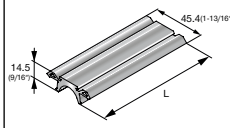
MT-RI 2 cm	7 g	100 pc	**2337454**	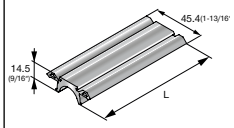

7

MT Profile Rubber Inlays

Open C-channels

Operation Instruction

MT-RI

2348181-12.2021

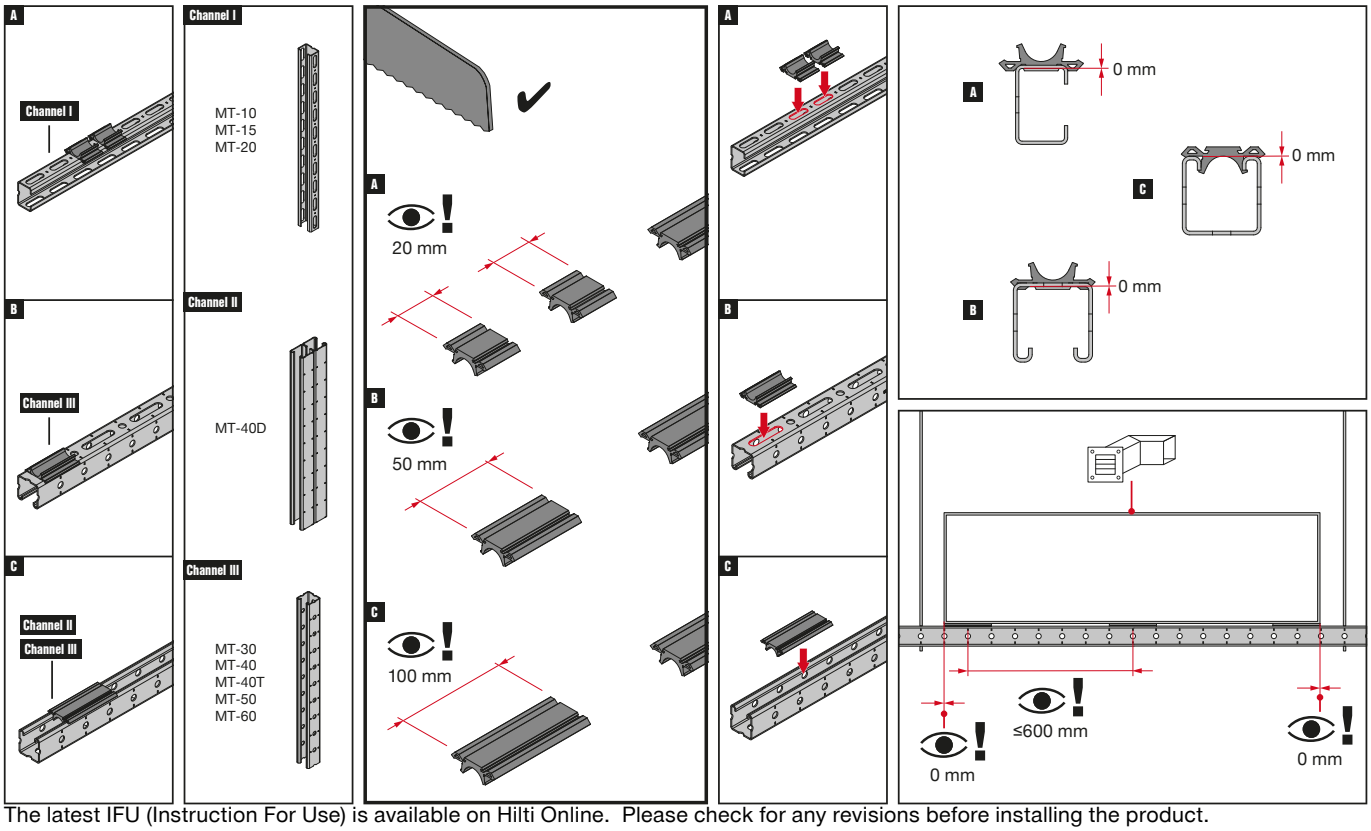

The latest IFU (Instruction For Use) is available on Hilti Online. Please check for any revisions before installing the product.

MT-C-T 3D/2/HL OC Connector - Outdoor

3D connector for assembling rigid channel structures for outdoor use with low pollution

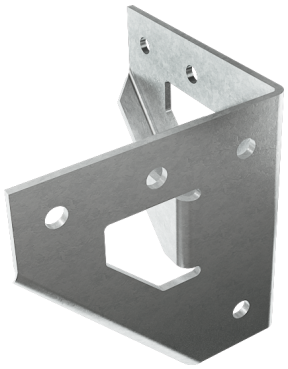

Applications

- Installing ventilation equipment, ducts, pipework and cable trays on flat roofs
- Suitable for use in outdoor environments

Advantages

- Part of the Hilti MT system – an economical, all-in-one solution for virtually all modular MEP support structures
- Easy to install – compatible with the Hilti MT Twist-Lock and hexagon bolts
- Provides rigidity to free standing structures
- Allows bracing to be removed

Technical data

Material composition	S235JR
Surface finish	Outdoor Coated - HDG

MT-C-T 3D/2/HL Connector - Outdoor

Order Designation	Technical data	Sales pack quantity	Item number	
MT-C-T 3D/2/HL OC	Outdoor, low to moderate pollution (C3 / C4 - low)	8 pc	**2320181**	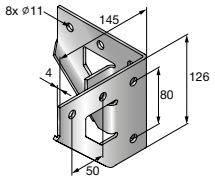

MT-B-LDP ME Load distribution plate

Medium load distribution plate for installing ventilation ducts and ventilation equipment on flat roofs

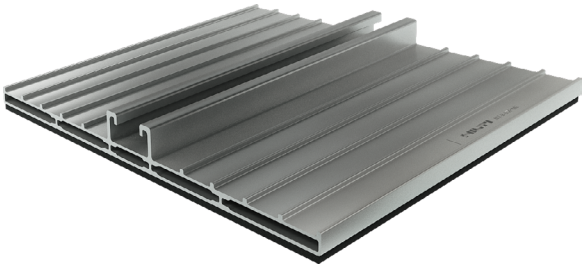

Applications

- Installing ventilation equipment, ducts, pipework, cable trays on flat roofs
- Suitable for use in outdoor environments

Advantages

- Part of the Hilti MT system – an economical, all-in-one solution for rooftop ventilation and other modular support systems
- Easier to handle and transport compared to pre-fabricated welded steel
- Includes a non-slip anti-vibration mat
- Suitable for outdoor applications, with features such as aluminum feet for better weather resistance

Technical data

Material composition	Aluminium, EPDM rubber
Surface finish	n/a

MT-B-LDP ME Load distribution plate

Order Designation	Technical data	Sales pack quantity	Item number	
MT-B-LDP ME	Outdoor, low to moderate pollution (C3 / C4 - low)	1 pc	**2328319**	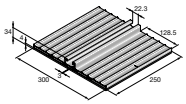

MT-B-LDP S Load distribution plate

Small load distribution plate for installing ventilation ducts, pipework or cable trays on flat roofs

Applications

- Installing ventilation ducts, pipework and cable trays on flat roofs
- Suitable for use in outdoor environments

Advantages

- Part of the Hilti MT system – an economical, all-in-one solution for rooftop ventilation and other modular support systems
- Easier to handle and transport compared to pre-fabricated welded steel
- Includes a non-slip anti-vibration mat
- Suitable for outdoor applications, with features such as aluminum feet for better weather resistance

Technical data

Material composition	Aluminium, EPDM rubber
Surface finish	n/a

MT-B-LDP S Load distribution plate

Order Designation	Technical data	Sales pack quantity	Item number	
MT-B-LDP S	Outdoor, low to moderate pollution (C3 / C4 - low)	2 pc	**2320182**	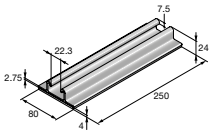

MT-C-LDP L1 OC Angle Connector - Outdoor

Angle connector for assembling channel structure or channel with Load Distribution Plate, for outdoor use with low pollution

Applications

- Fastening connections between two strut channels or one channel and Load Distribution Plate
- Perfectly suitable for outdoor applications

Advantages

- Part of the Hilti MT system – an economical, all-in-one solution for virtually all modular MEP support structures
- Vertical channel can be inclined up to 7-degrees for compensation of roof pitch
- Connector with channel can be inclined up to 10-degrees for compensation of roof pitch

Technical data

Material composition	Q235 or better steel
Surface finish	Outdoor Coated - HDG

MT-C-LDP L1 OC Angle Connector - Outdoor

Order Designation	Technical data	Sales pack quantity	Item number	
MT-C-LDP L1 OC	Outdoor, low to moderate pollution (C3 / C4 - low)	8 pc	**2320180**	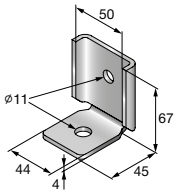

8

MT-C-T 3D/2/HL OC Connector - Outdoor

Operation instruction
MT-C-T 3D/2/HL OC

2321403-03.2021

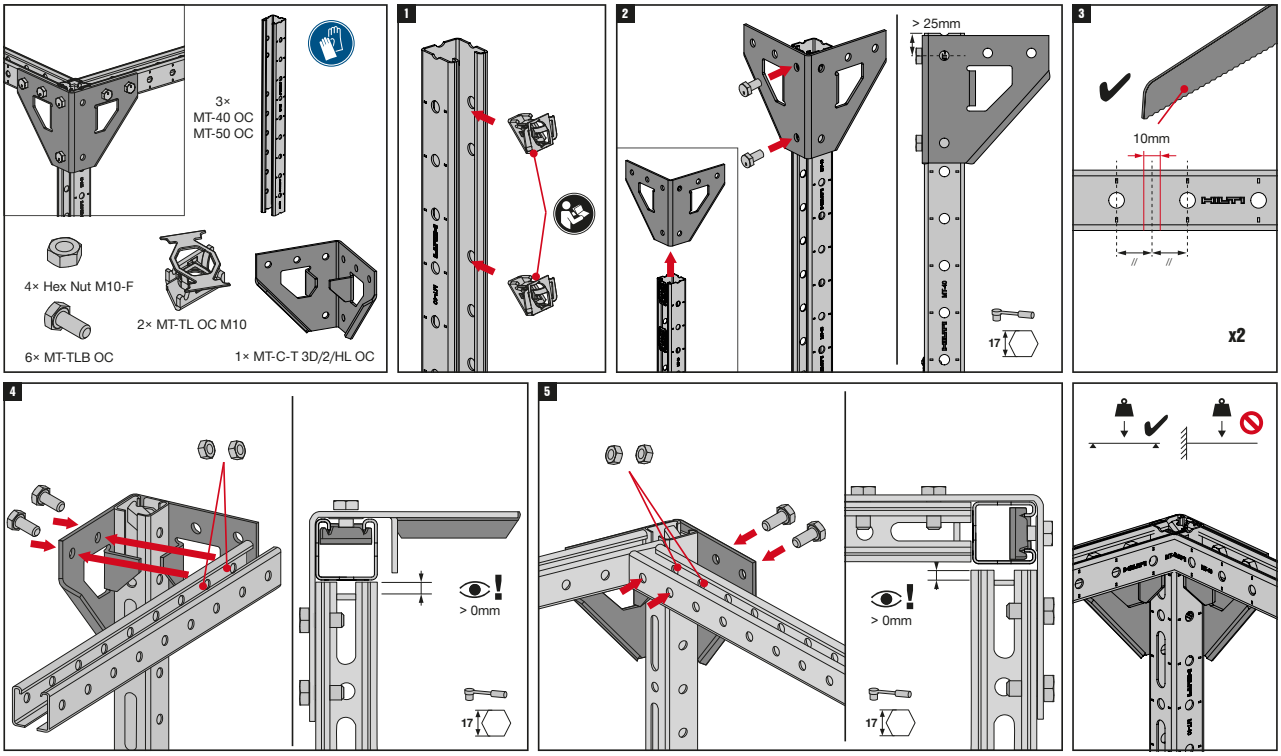

The latest IFU (Instruction For Use) is available on Hilti Online. Please check for any revisions before installing the product.

MT-B-LDP ME Load distribution plate

Operation instruction
MT-B-LDP ME

2330200-06.2021

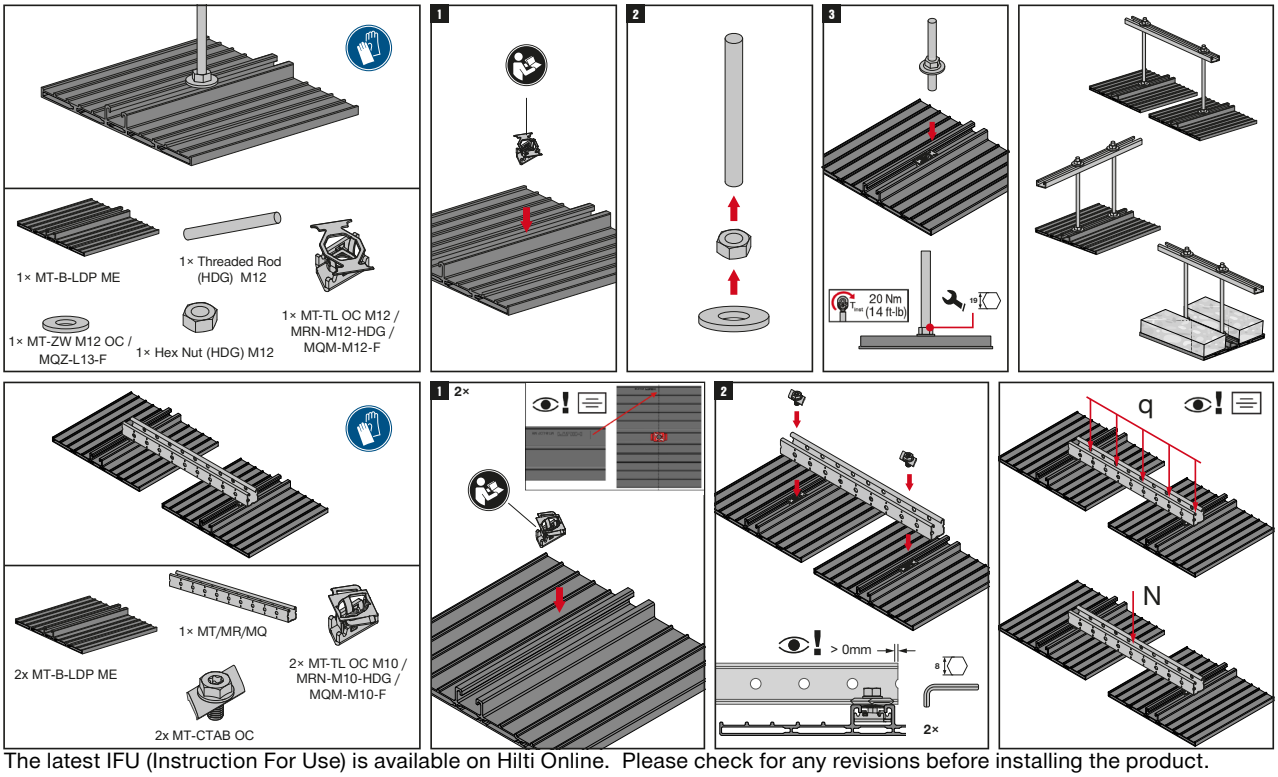

The latest IFU (Instruction For Use) is available on Hilti Online. Please check for any revisions before installing the product.

8

MT-B-LDP S Load distribution plate

Operation instruction

MT-B-LDP S

2321404-06.2021

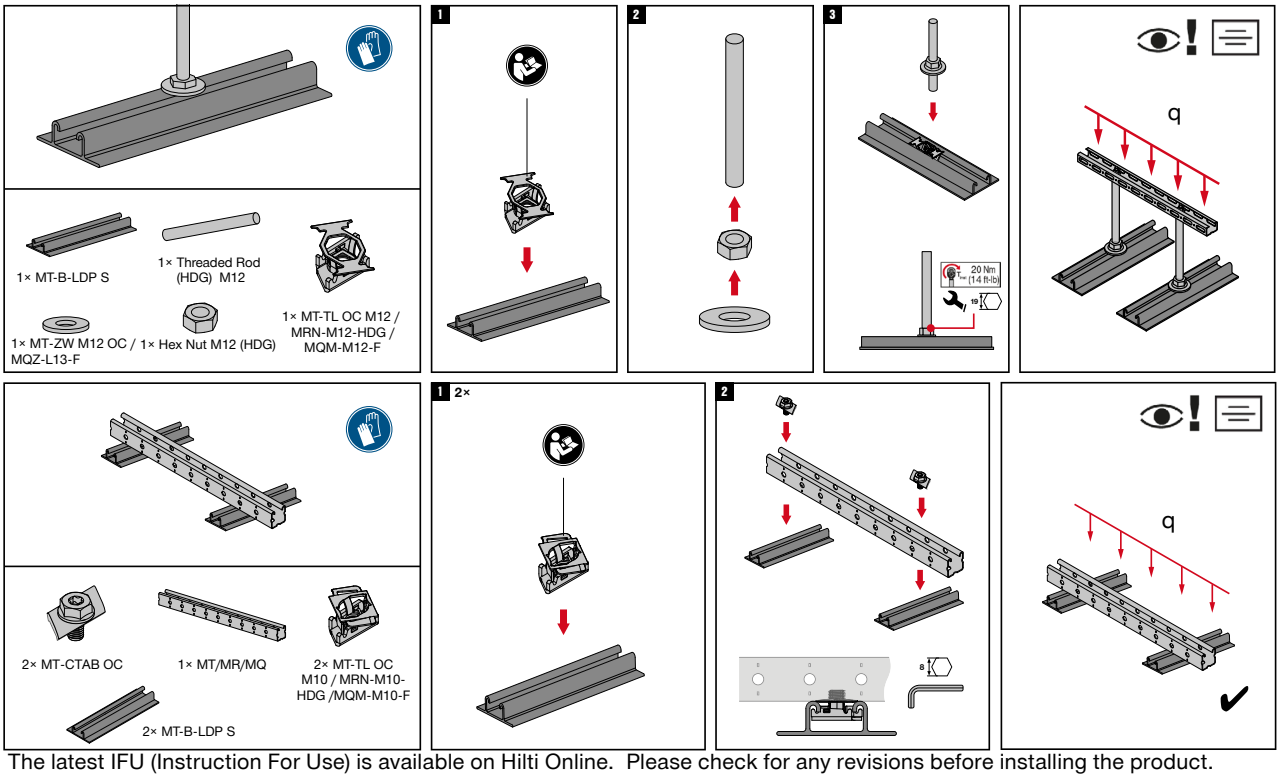

The latest IFU (Instruction For Use) is available on Hilti Online. Please check for any revisions before installing the product.

MT-C-LDP L1 OC Angle Connector - Outdoor

Operation instruction

MT-C-LDP L1 OC

2321402-02.2021

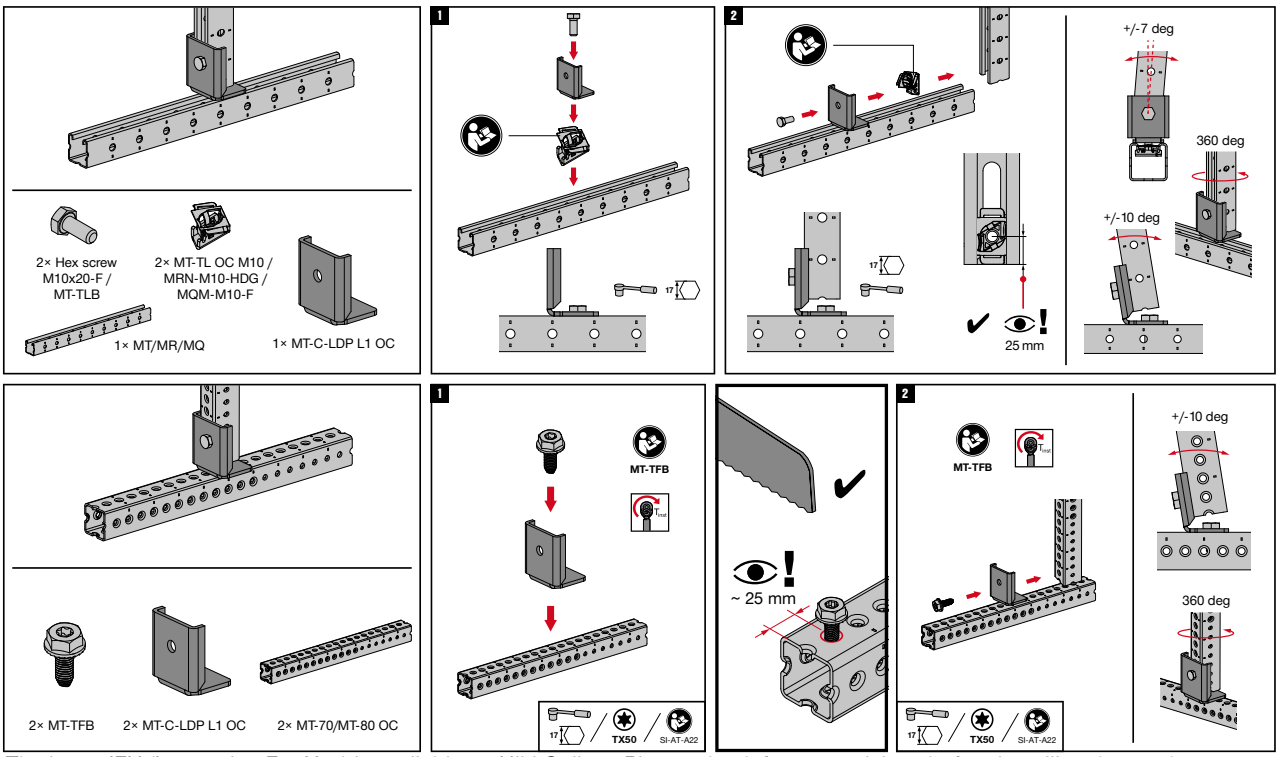

The latest IFU (Instruction For Use) is available on Hilti Online. Please check for any revisions before installing the product.

MT-S-RS Rod stiffener

Pre-assembled connector for fastening Channel around threaded rod to provide seismic bracing

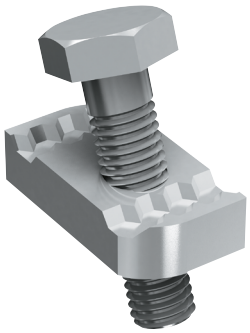

Applications

- Fixing threaded rod lengthwise within MT C-Channels
- Increasing the compressive strength of threaded rod for use as seismic bracing in MEP support structures
- Suitable for use in dry, indoor environments

Technical data

Material composition	Q235 or better steel
Surface finish	Pre-galvanized - for dry indoor use only

Advantages

- Part of the Hilti MT system – an economical, all-in-one solution for virtually all modular MEP support structures
- Increasing the compressive strength of threaded rod for use as seismic bracing in MEP support structures
- Adaptable – unlike welding, modular rod stiffeners allow you to modify C-Channel framing for future MEP requirements

MT-S-RS Rod stiffener

Order Designation	Technical data	Sales pack quantity	Item number	
MT-S-RS	Dry indoor conditions (C1) Indoor with temporary condensation (C2)	25 pc	**2282198**	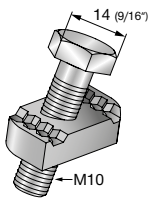

MT-S-RS OC Rod stiffener - Outdoor

Pre-assembled connector for fastening Channel around threaded rod to provide seismic bracing

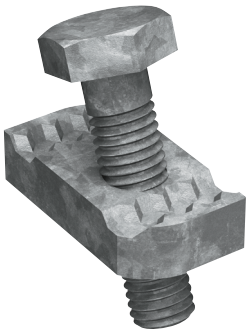

Applications

- Fixing threaded rod lengthwise within MT C-Channels
- Increasing the compressive strength of threaded rod for use as seismic bracing in MEP support structures
- Suitable for use in moderately corrosive environments

Advantages

- Part of the Hilti MT system – an economical, all-in-one solution for virtually all modular MEP support structures
- Increasing the compressive strength of threaded rod for use as seismic bracing in MEP support structures
- Adaptable – unlike welding, modular rod stiffeners allow you to modify C-Channel framing for future MEP requirements

Technical data

Material composition	Q235 or better steel
Surface finish	Hot-dip galvanized - for outdoor use

MT-S-RS Rod stiffener

Order Designation	Technical data	Sales pack quantity	Item number	
MT-S-RS OC	Outdoor, low to moderate pollution (C3 / C4 - low)	25 pc	**2273584**	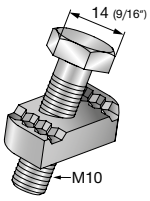

MT-S-H1 Seismic Brace Base

One-hole hinged connector for assembling seismic bracing of MT C-Channel framing

Applications

- Seismic bracing of C-Channel framing
- Anchoring C-Channel brace members to concrete for use as seismic bracing
- Connecting C-Channel brace members to MT-S-L seismic angle brackets for use as seismic bracing
- Suitable for use in dry, indoor environments

Advantages

- Part of the Hilti MT system – an economical, all-in-one solution for virtually all modular MEP support structures
- Easy to install – pivoting joint simplifies assembly and fastening
- Engineering and calculation service available – your local Hilti Engineers can provide advice and calculation services on more complex projects

Technical data

Material composition	Q355 or better steel
Surface finish	Pre-galvanized - for dry indoor use only

MT-S-H1 Seismic Brace Base

Order Designation	Technical data	Anchorage hole - D	Sales pack quantity	Item number	
MT-S-H1 M10	Dry indoor conditions (C1) Indoor with temporary condensation (C2)	11,55 mm	10 pc	**2273645**	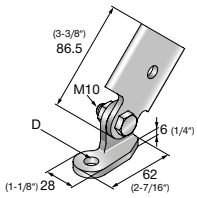
MT-S-H1 M12		13,65 mm	10 pc	**2273646**	

MT-S-H1 OC Seismic Brace Base - Outdoor

One-hole hinged connector for assembling seismic bracing of MT C-Channel framing

Applications

- Seismic bracing of C-Channel framing
- Anchoring C-Channel brace members to concrete for use as seismic bracing
- Connecting C-Channel brace members to MT-S-L seismic angle brackets for use as seismic bracing
- Suitable for use in moderately corrosive environments

Advantages

- Part of the Hilti MT system – an economical, all-in-one solution for virtually all modular MEP support structures
- Easy to install – pivoting joint simplifies assembly and fastening
- Engineering and calculation service available – your local Hilti Engineers can provide advice and calculation services on more complex projects
- Corrosion resistant – hot-dip galvanized to help protect against moisture and chemical corrosion

Technical data

Material composition	Q355 or better steel
Surface finish	Hot-dip galvanized - for outdoor use

MT-S-H1 OC Seismic Brace Base - Outdoor

Order Designation	Technical data	Anchorage hole - D	Sales pack quantity	Item number	
MT-S-H1 M10 OC	Outdoor, low to moderate pollution (C3 / C4 - low)	11,55 mm	10 pc	**2282199**	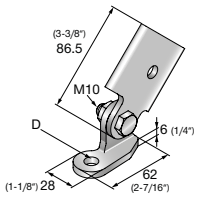
MT-S-H1 M12 OC		13,65 mm	10 pc	**2282200**	

MT-S-H2 Seismic Brace Base

Two-hole hinged connector for assembling seismic bracing of MT C-Channel framing

Applications

- Seismic bracing of C-Channel framing
- Anchoring C-Channel brace members to concrete for use as seismic bracing
- Connecting C-Channel brace members to MT-S-L seismic angle brackets for use as seismic bracing
- Suitable for use in dry, indoor environments

Advantages

- Part of the Hilti MT system – an economical, all-in-one solution for virtually all modular MEP support structures
- Easy to install – pivoting joint simplifies assembly and fastening
- Engineering and calculation service available – your local Hilti Engineers can provide advice and calculation services on more complex projects

Technical data

Material composition	Q355 or better steel
Surface finish	Pre-galvanized - for dry indoor use only

MT-S-H2 Seismic Brace Base

Order Designation	Technical data	Anchorage hole - D	Sales pack quantity	Item number	
MT-S-H2 M10	Dry indoor conditions (C1) Indoor with temporary condensation (C2)	11,55 mm	10 pc	**2273647**	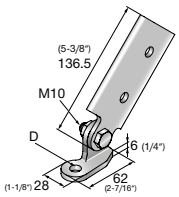
MT-S-H2 M12		13,65 mm	10 pc	**2273648**	

MT-S-H2 OC Seismic Brace Base - Outdoor

Two-hole hinged connector for assembling seismic bracing of MT C-Channel framing

Applications

- Seismic bracing of C-Channel framing
- Anchoring C-Channel brace members to concrete for use as seismic bracing
- Connecting C-Channel brace members to MT-S-L seismic angle brackets for use as seismic bracing
- Suitable for use in moderately corrosive environments

Advantages

- Part of the Hilti MT system – an economical, all-in-one solution for virtually all modular MEP support structures
- Easy to install – pivoting joint simplifies assembly and fastening
- Engineering and calculation service available – your local Hilti Engineers can provide advice and calculation services on more complex projects
- Corrosion resistant – hot-dip galvanized to help protect against moisture and chemical corrosion

Technical data

Material composition	Q355 or better steel
Surface finish	Hot-dip galvanized - for outdoor use

MT-S-H2 OC Seismic Brace Base - Outdoor

Order Designation	Technical data	Anchorage hole - D	Sales pack quantity	Item number	
MT-S-H2 M10 OC	Outdoor, low to moderate pollution (C3 / C4 - low)	11,55 mm	10 pc	**2282201**	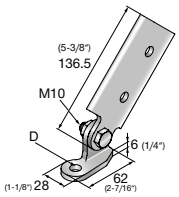
MT-S-H2 M12 OC		13,65 mm	10 pc	**2282202**	

MT-S-L Seismic angle bracket

Angle bracket for assembling braced MT C-Channel structures in seismic zones

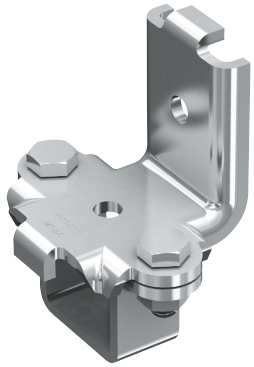

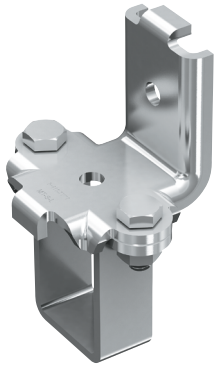

Applications

- Right-angle connections between MT-40, MT-60 C-Channels & MT-40D double C-Channels with connection to seismic bracing
- Assembling metal framing for MEP support structures in seismic zones
- Suitable for use in dry, indoor environments

Technical data

Material composition	Q235 or better steel
Surface finish	Pre-galvanized - for dry indoor use only

Advantages

- Part of the Hilti MT system – an economical, all-in-one solution for virtually all modular MEP support structures
- Easy to install – compatible with the Hilti MT Twist-Lock, a faster alternative to spring nuts for assembling a modular support system
- Winged angle connector – includes connection points to MT-S-H1 and MT-S-H2
- Adaptable – unlike welding, seismic brackets allow you to modify C-Channel framing for future MEP requirements

MT-S-L Seismic angle bracket

Order Designation	Technical data	Sales pack quantity	Item number	
MT-S-L 40-50	Dry indoor conditions (C1) Indoor with temporary condensation (C2)	10 pc	**2273649**	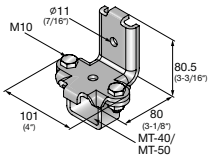
MT-S-L 60		10 pc	**2273650**	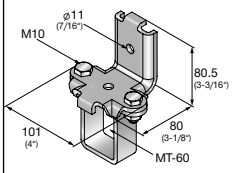
MT-S-L 40D		10 pc	**2273651**	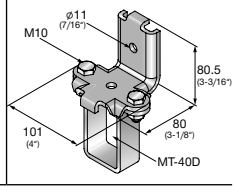

MT-S-L OC Seismic angle bracket - Outdoor

Angle bracket for assembling braced MT C-Channel structures in seismic zones

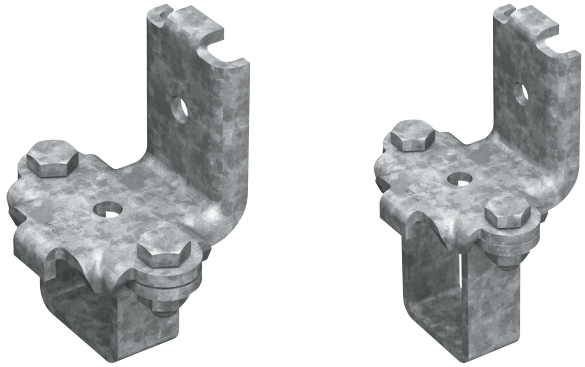

Applications

- Right-angle connections between MT-40, MT-60 C-Channels & MT-40D double C-Channels with connection to seismic bracing
- Assembling metal framing for MEP support structures in seismic zones
- Suitable for use in moderately corrosive environments

Technical data

Material composition	Q235 or better steel
Surface finish	Hot-dip galvanized - for outdoor use

Advantages

- Part of the Hilti MT system – an economical, all-in-one solution for virtually all modular MEP support structures
- Easy to install – compatible with the Hilti MT Twist-Lock, a faster alternative to spring nuts for assembling a modular support system
- Adaptable – unlike welding, seismic brackets allow you to modify C-Channel framing for future MEP requirements
- Engineering and calculation service available – your local Hilti Engineers can provide advice and calculation services on more complex projects

MT-S-L OC Seismic angle bracket - Outdoor

Order Designation	Technical data	Sales pack quantity	Item number	
MT-S-L 40-50 OC	Outdoor, low to moderate pollution (C3 / C4 - low)	10 pc	**2282203**	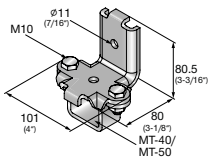
MT-S-L 60 OC		10 pc	**2282204**	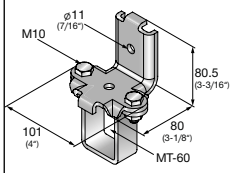
MT-S-L 40D OC		10 pc	**2282205**	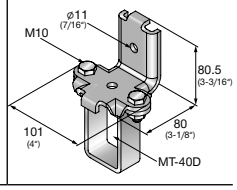

MT Fast-Lock seismic hinges

One-hole hinged Connector with pre-assembled Fast-Lock nut and bolt for assembling seismic bracing of MT C-Channel framing

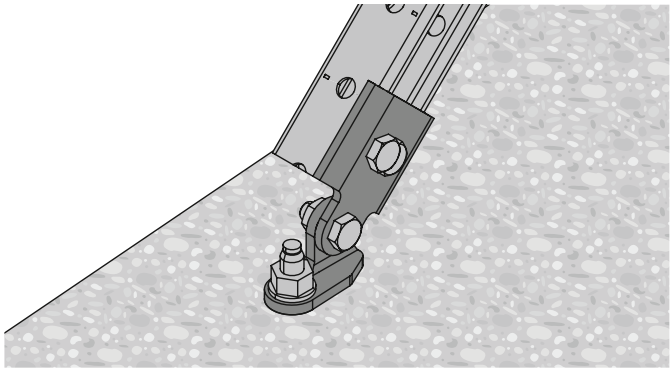

Applications

- Seismic bracing of C-Channel framing
- Anchoring C-Channel brace members to concrete for use as seismic bracing
- Connecting C-Channel brace members to MT-S-L seismic angle brackets for use as seismic bracing
- Suitable for use in dry, indoor environments

Technical data

Material composition	DD11 MOD
Surface finish	Indoor-coated Electro-galvanized

Advantages

- Faster installations – pre-assembled with the Hilti MT Fast-Lock, our fastest method for assembling a modular support system with fewer steps
- Simplified stock management – pre-assembly greatly reduces the total number of MT components, for easier purchasing, handling, and storage
- Consistent installation quality – pre-assembly removes additional steps, helping reduce assembly errors for safer installations
- Easy to install – pivoting joint simplifies assembly and fastening
- Part of the Hilti MT system – an economical, all-in-one solution for virtually all modular MEP support structures
- Extensive software support - PROFIS Modular Support Engineering, BIMCAD content, and Revit® families are all available to streamline design and ordering

MT-S-H1 FL Pre-assembled Seismic Hinge

Order Designation	Material composition	Technical data	Anchorage - D	Sales pack quantity	Item number	
MT-S-H1 FL M10	Q235B	Dry indoor conditions (C1) Indoor with temporary condensation (C2)	11,55 mm	14 pc	**2399662**	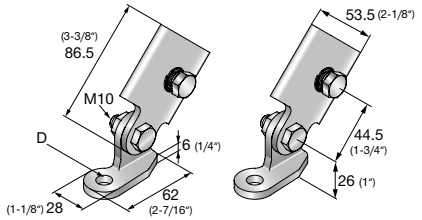
MT-S-H1 FL M12	Q235B	Dry indoor conditions (C1) Indoor with temporary condensation (C2)	13,65 mm	14 pc	**2399663**	

MT-S-L FL 40 seismic angle bracket

Angle bracket with pre-assembled Fast-Lock nut and bolt for assembling braced MT-40 C-Channel structures in seismic zones

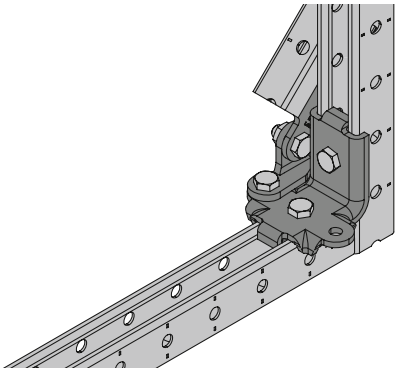

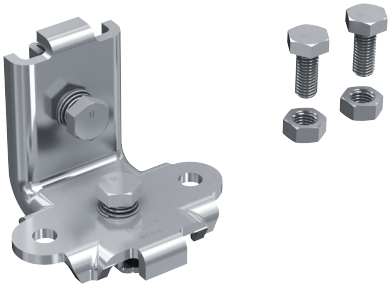

Applications

- Right-angle connections between MT-40 C-Channels with connection to seismic bracing
- Assembling metal framing for MEP support structures in seismic zones
- Suitable for use in dry, indoor environments

Technical data

Material composition	DD11 MOD
Surface finish	Indoor-coated Electro-galvanized

Advantages

- Faster installations – pre-assembled with the Hilti MT Fast-Lock, our fastest method for assembling a modular support system with fewer steps
- Simplified stock management – pre-assembly greatly reduces the total number of MT components, for easier purchasing, handling, and storage
- Consistent installation quality – pre-assembly removes additional steps, helping reduce assembly errors for safer installations
- Winged angle Connector – includes connection points to MT-S-H1
- Part of the Hilti MT system – an economical, all-in-one solution for virtually all modular MEP support structures
- Extensive software support - PROFIS Modular Support Engineering, BIMCAD content, and Revit® families are all available to streamline design and ordering

MT-S-L FL Pre-assembled Seismic Angle Bracket

Order Designation	Material composition	Technical data	Sales pack quantity	Item number	
MT-S-L FL seismic	S235JR, Q235B	Dry indoor conditi-ons (C1) Indoor with temporary conden-sation (C2)	14 pc	**2399664**	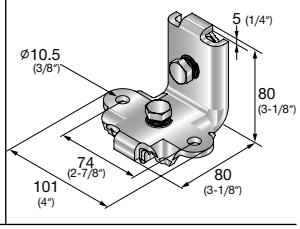

9

MT-S-RS Rod stiffener

Operation instruction

MT-S-RS / MT-S-RS OC

2294624-08.2020

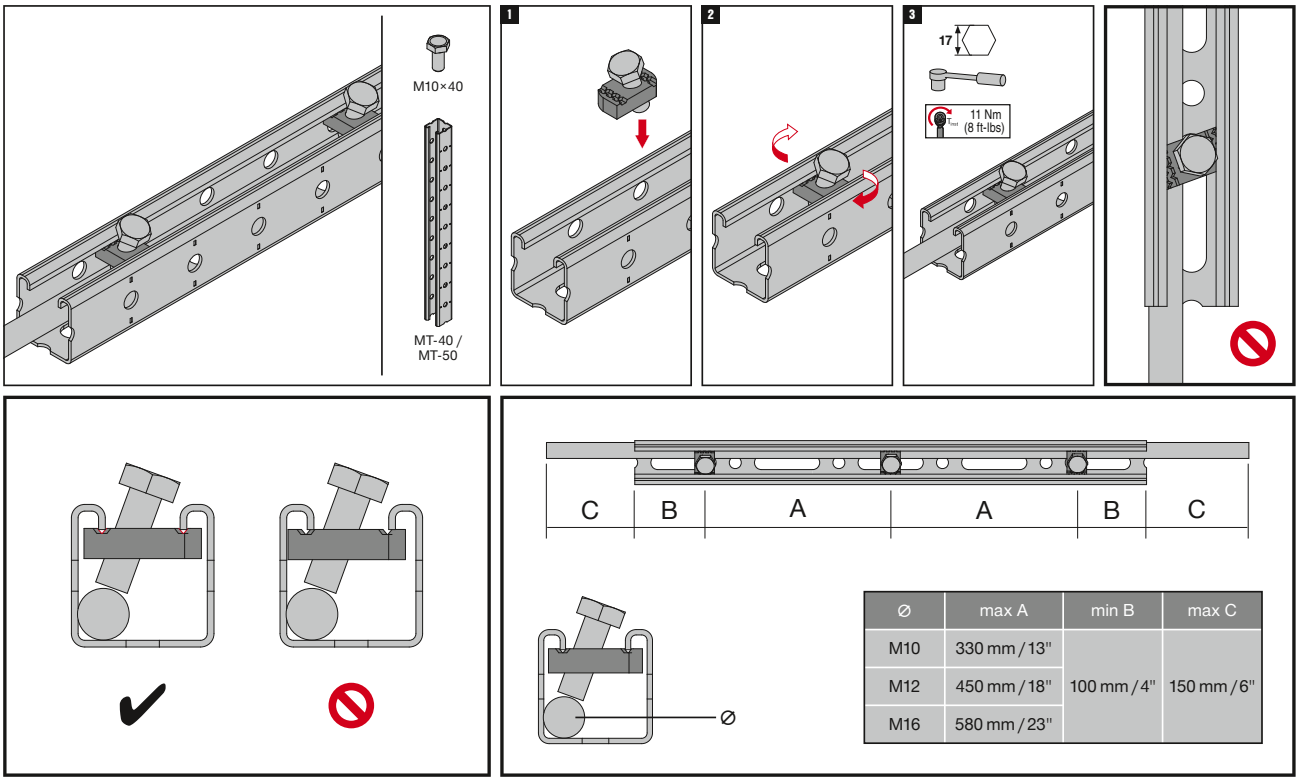

Ø	max A	min B	max C
M10	330 mm / 13"	100 mm / 4"	150 mm / 6"
M12	450 mm / 18"		
M16	580 mm / 23"		

The latest IFU (Instruction For Use) is available on Hilti Online. Please check for any revisions before installing the product.

MT-S-L Seismic angle bracket

Operation instruction

MT-S-L 40-50 / MT-S-L 60 / MT-S-L 40D
MT-S-L 40-50 OC / MT-S-L 60 OC / MT-S-L 40D OC

2294626-09.2020

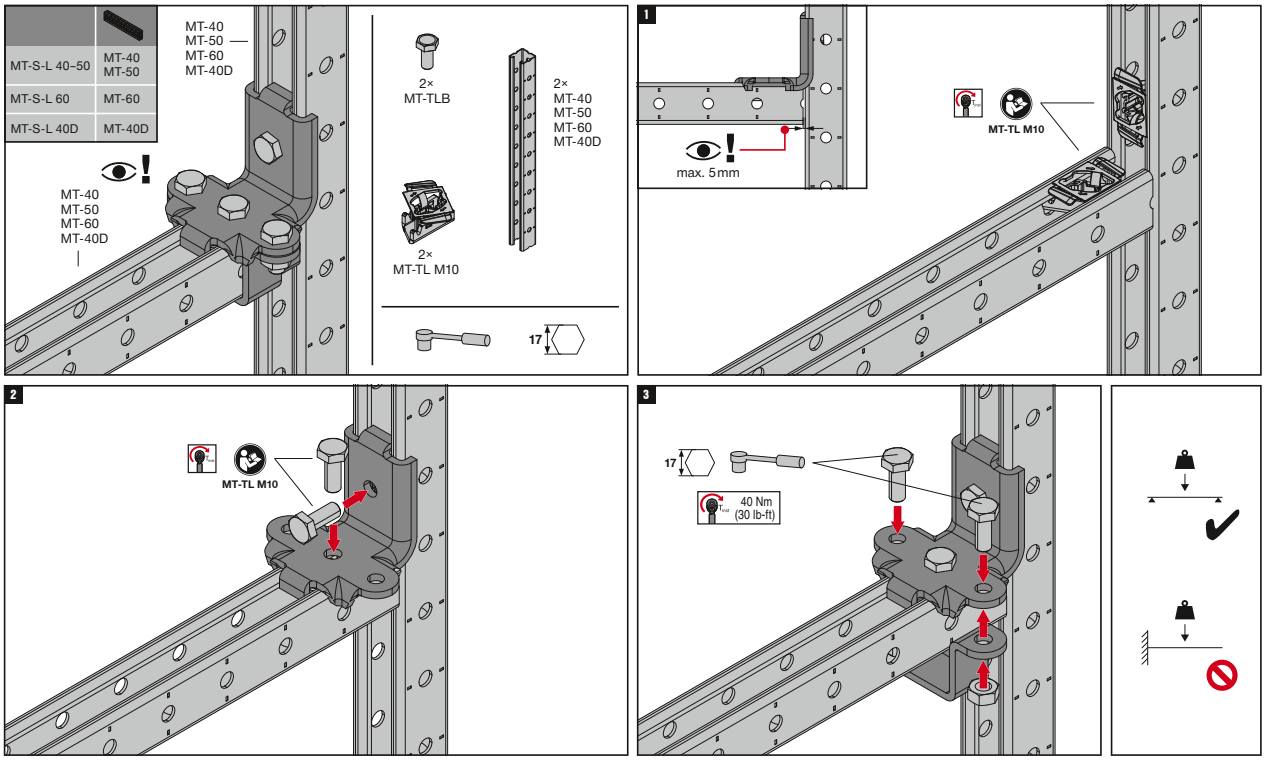

The latest IFU (Instruction For Use) is available on Hilti Online. Please check for any revisions before installing the product.

MT-S-H1 Seismic Brace Base

1

Operation instruction

MT-S-H1 M10/ MT-S-H1 M12
MT-S-H1 M10 OC/ MT-S-H1 M12 OC

2294625-03.2022

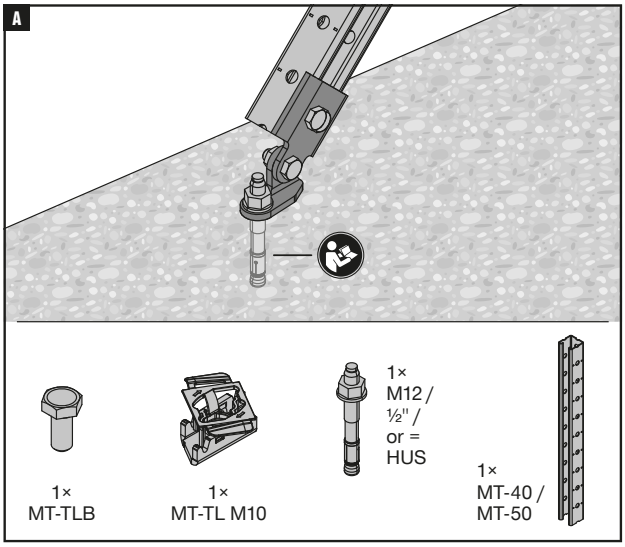

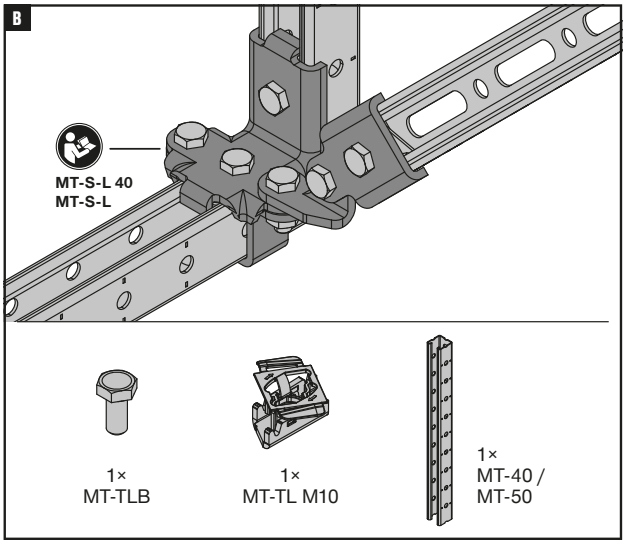

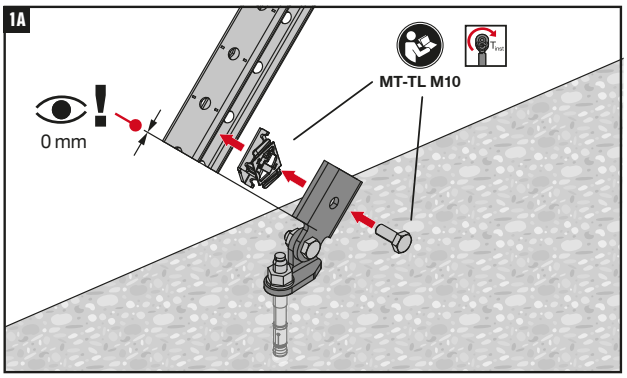

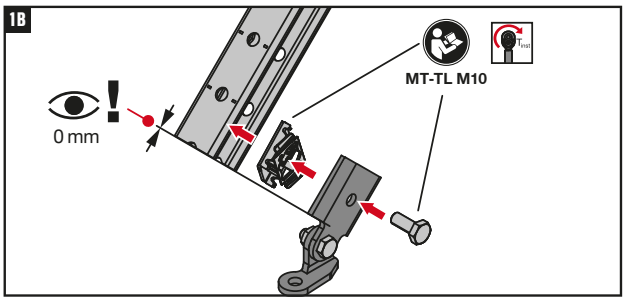

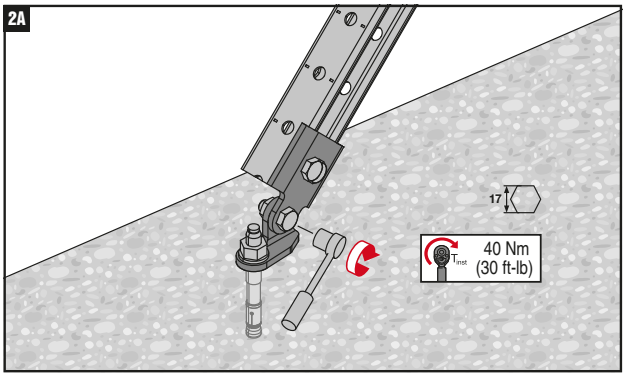

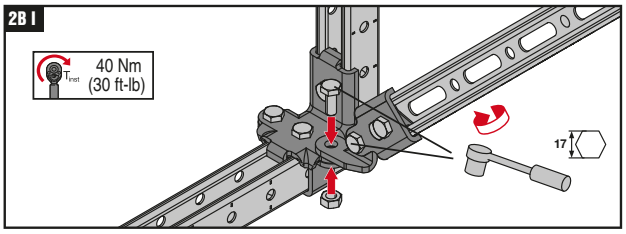

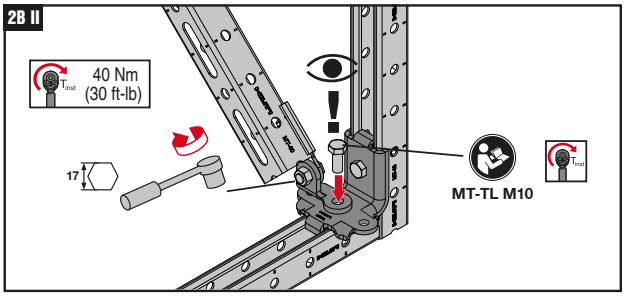

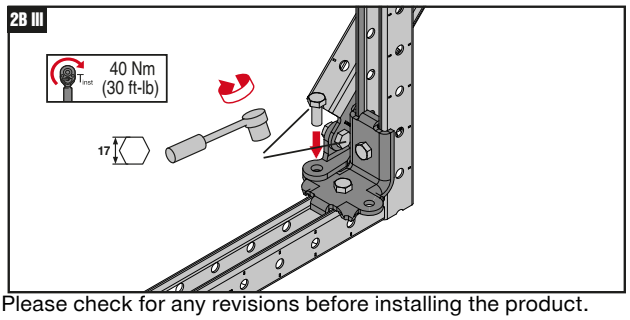

The latest IFU (Instruction For Use) is available on Hilti Online. Please check for any revisions before installing the product.

MT-S-H2 Seismic Brace Base

Operation instruction

MT-S-H2 M10/ MT-S-H2 M12
MT-S-H2 M10 OC/ MT-S-H2 M12 OC

2300064-10.2020

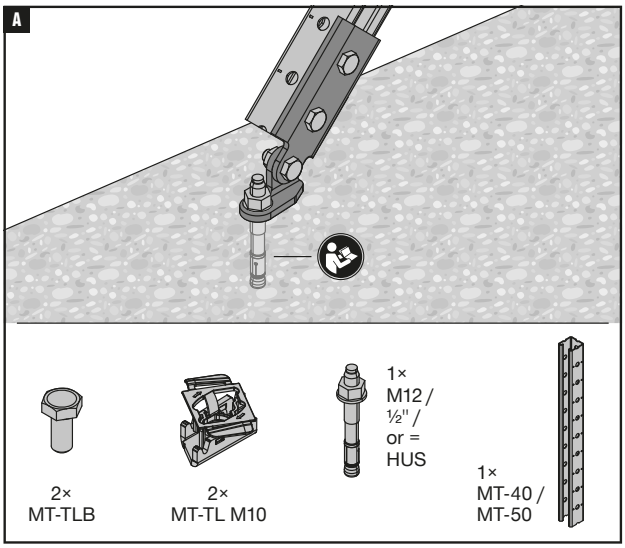

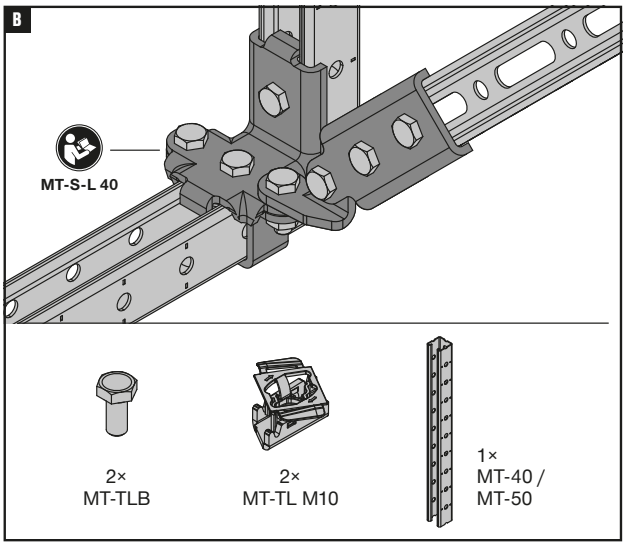

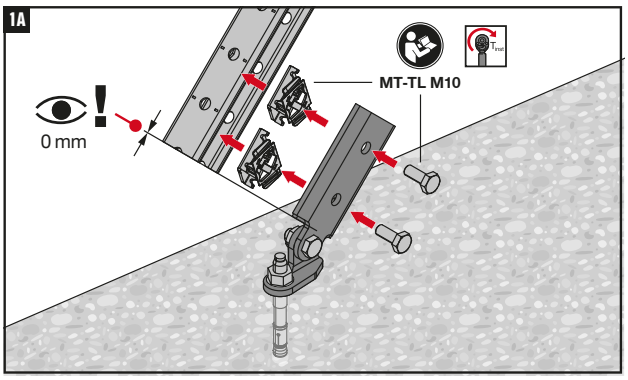

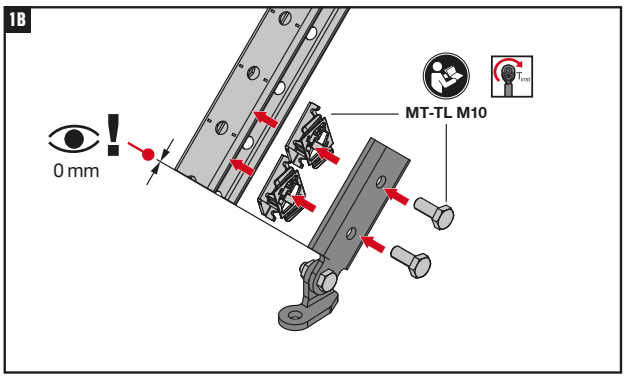

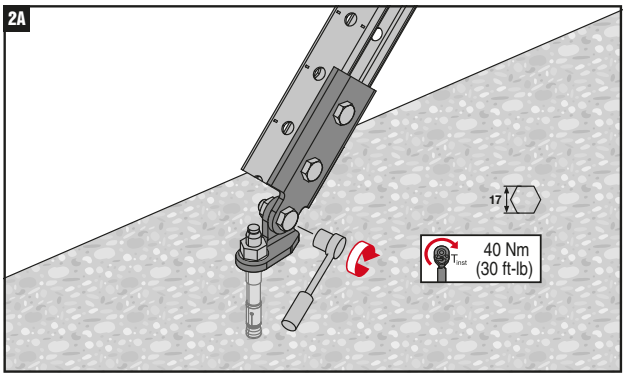

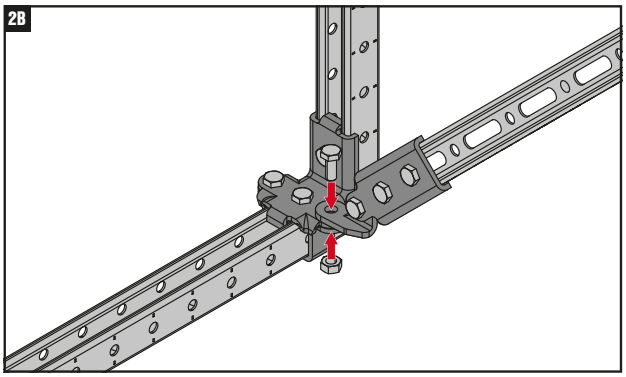

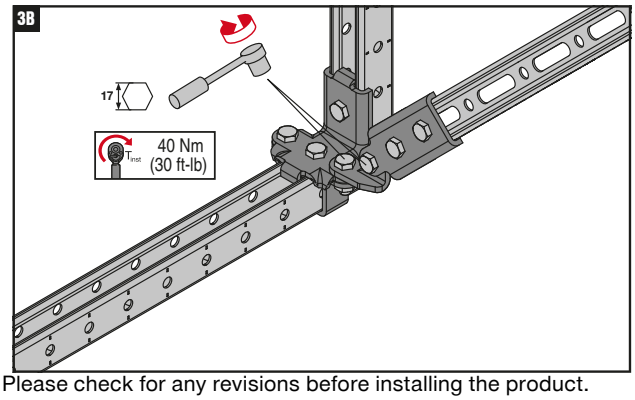

The latest IFU (Instruction For Use) is available on Hilti Online. Please check for any revisions before installing the product.

MT-S-A Seismic hinge

Galvanized seismic hinge for use as a bracing component

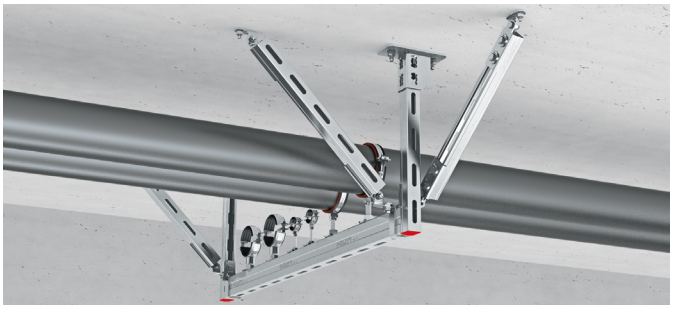

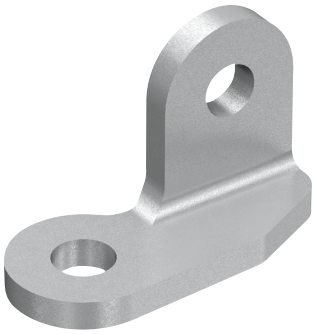

Applications

- Installing pipes, cable trays and air duct supports in seismic-relevant areas

Advantages

- High load capacity – engineered for optimal transfer of seismic loads
- Easily combinable with other Hilti seismic components

Technical data

Material composition	S355 MC - DIN EN 10149-2
Surface finish	Indoor Coated - Electro galvanized

MT-S-A Seismic hinge

Order Designation	Technical data	Diameter - D	Sales pack quantity	Item number	
MT-S-A-8	Dry indoor conditions (C1) Indoor with temporary condensation (C2)	9,40 mm	10 pc	**2083721**	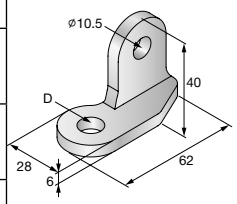
MT-S-A-10		11,55 mm	10 pc	**2083722**	
MT-S-A-12		13,65 mm	10 pc	**2083723**	
MT-S-A-16		16,30 mm	10 pc	**2083724**	

MT-S-AP Seismic rod hinge

Galvanized threaded rod hinge for seismic bracing of MEP support structures

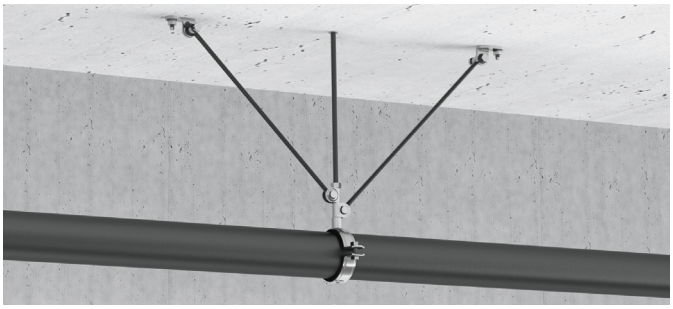

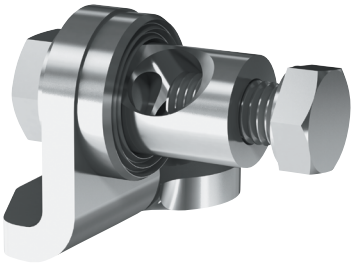

Applications

- Installing pipes, cable trays and air duct supports in seismic-relevant areas
- Fastening threaded rod seismic bracing to concrete or connecting to MQS-W seismic angles
- Recommended for use in dry, interior environments

Technical data

Material composition	Baseplate: S355MC - DIN EN 10149-2, Pin: 11SMn30+C - DIN EN 10277-3, Threaded washer: 11SMn30+C - DIN EN 10277-3, Hexagon screws: Steel grade 8.8, Washer: Galvanized steel
Surface finish	Indoor Coated - Electro galvanized

Advantages

- Rapid installation – helps to save time on-site thanks to single-anchor fastening: all you need is the single pre-assembled screw and no additional nuts
- High load capacity – designed for optimal seismic load transfer to the support
- Versatile – load range suitable for a wide range of light- and medium-duty MEP installations
- Engineering support available – contact your local Hilti team for project-specific advice
- Bracing pre-assembly possible – providing additional productivity in seismic support installation

MT-S-AP Seismic rod hinge

Order Designation	Technical data	Diameter - D	Sales pack quantity	Item number	
MT-S-AP-8	Dry indoor conditions (C1) Indoor with temporary condensation (C2)	9,40 mm	10 pc	**2330874**	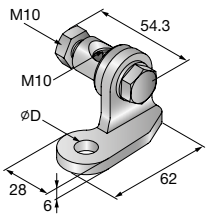
MT-S-AP-10		11,55 mm	10 pc	**2330875**	
MT-S-AP-12		13,65 mm	10 pc	**2330876**	

MT-S-HR Seismic hinge

Galvanized seismic hinge for use as a bracing component

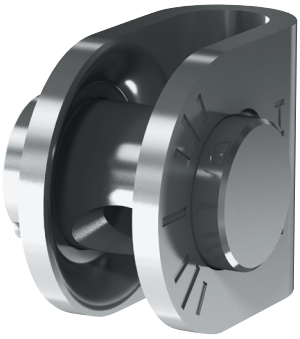

Applications

- Installing pipes, cable trays and air duct supports in seismic-relevant areas
- Connecting threaded rod and wire seismic bracing to MEP support structures, such as trapeze and suspended pipe rings
- Recommended for use in dry, interior environments

Advantages

- Retrofittable and adjustable – two-component design can more easily be post-installed to existing pipe/cable supports, with angle markings to make it easier to fix the rod at 45°
- Versatile – load range suitable for a wide range of light- and medium-duty MEP installations
- Engineering support available – contact your local Hilti team for project-specific advice

Technical data

Material composition	Connector: S275JR - EN 10025-2, Pin: 11SMnPb37+C - DIN EN 10277-3
Surface finish	Indoor Coated - Electro galvanized

MT-S-HR Seismic hinge

Order Designation	Technical data	Diameter - D	Sales pack quantity	Item number	
MT-S-HR-8	Dry indoor conditions (C1) Indoor with temporary condensation (C2)	8 mm	10 pc	**2330877**	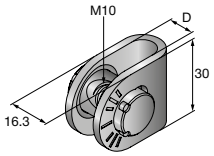
MT-S-HR-10		10 mm	10 pc	**2330878**	

MT-S-CH Seismic rod hinge

Galvanized pre-assembled threaded rod brace connector with increased load capacity for mounting to base material

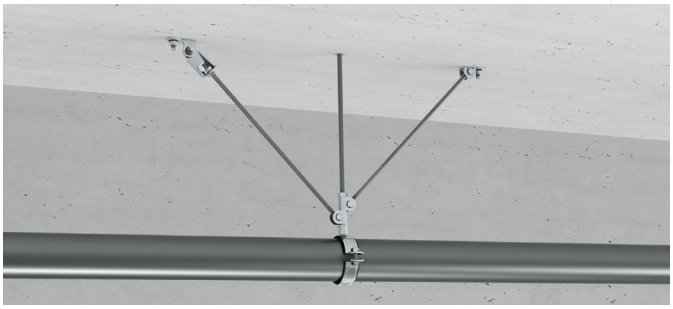

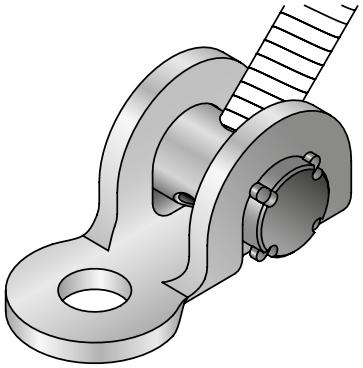

Applications

- Installing pipes, cable trays and air duct supports in seismic-relevant areas
- Assembling seismic bracing using threaded rods in a wide range of seismic applications

Advantages

- Easier and quicker to mount to M10 threaded rod
- Maximum installation flexibility due to adjustable angle
- Higher load capacity – engineered for optimal transfer of seismic loads

Technical data

Material composition	Connector: S275JR - DIN EN 10025, Pin: 11SMnPb37+C
Surface finish	Indoor Coated - Electro galvanized

MT-S-CH Seismic rod hinge

Order Designation	Technical data	Sales pack quantity	Item number	
MT-S-CH-10	Dry indoor conditions (C1) Indoor with temporary condensation (C2)	10 pc	**2083741**	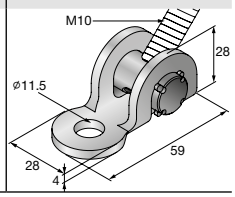

9

MT-S-AP Seismic rod hinge

Operation instruction

MT-S-AP-8 / MT-S-AP-10 / MT-S-AP-12

2332868-02.2022

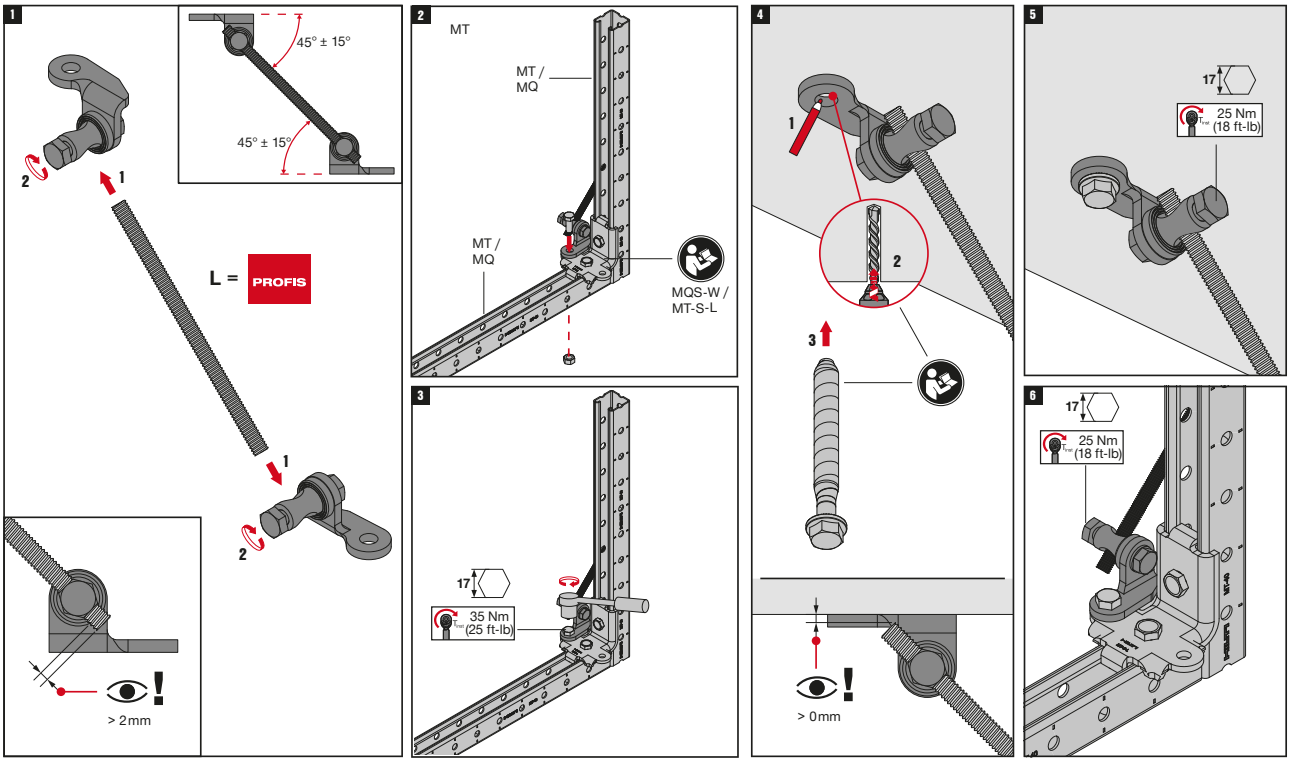

The latest IFU (Instruction For Use) is available on Hilti Online. Please check for any revisions before installing the product.

MT-S-HR Seismic hinge

Operation instruction

MT-S-HR-8 / MT-S-HR-10

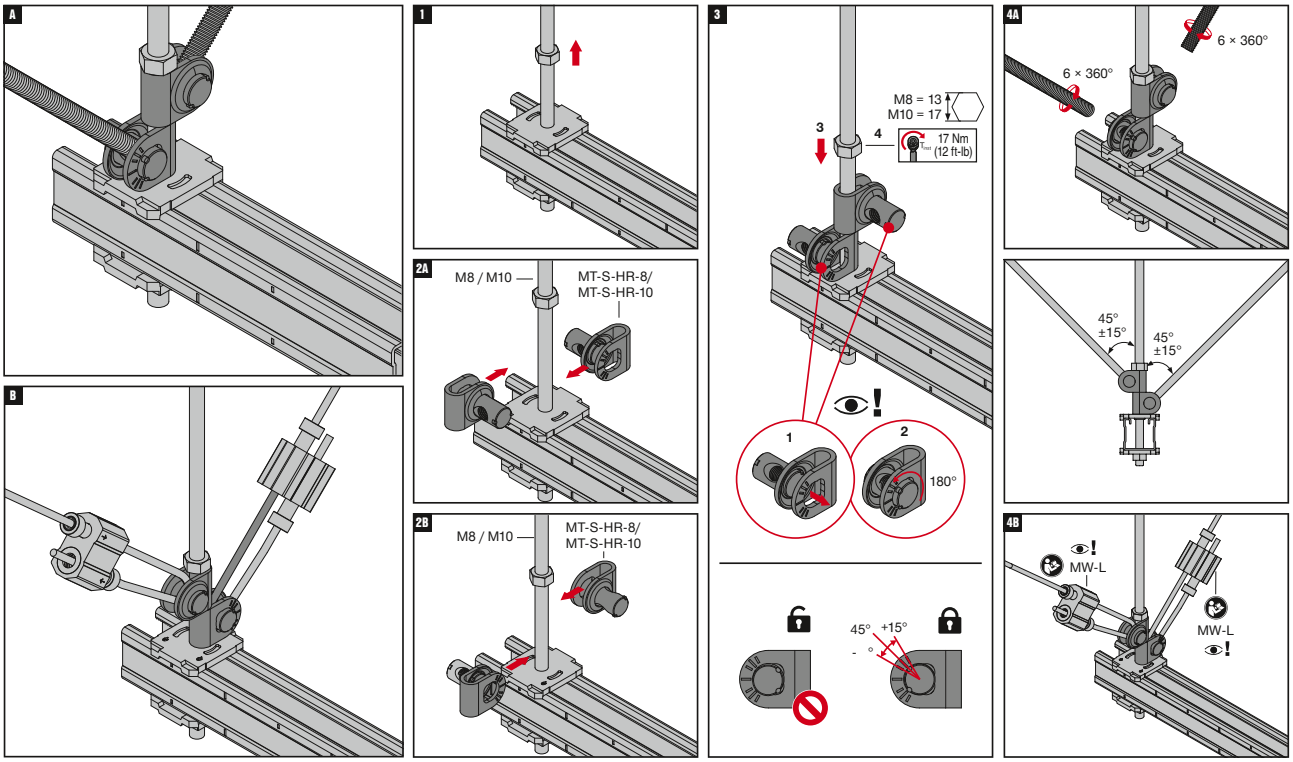

The latest IFU (Instruction For Use) is available on Hilti Online. Please check for any revisions before installing the product.

MT-S-CH Seismic rod hinge

Operation instruction

MT-S-CH-10

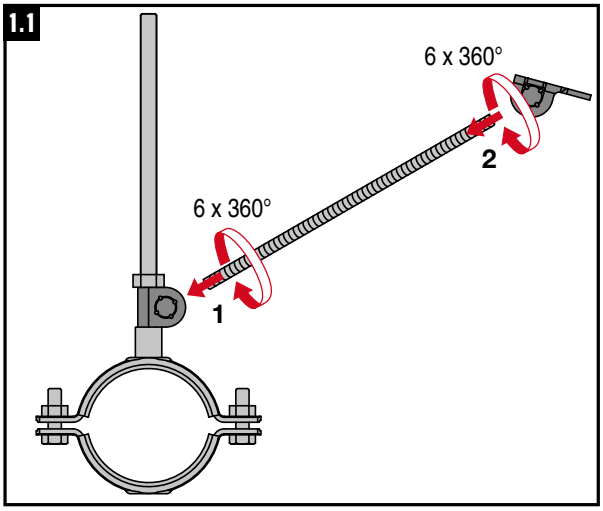

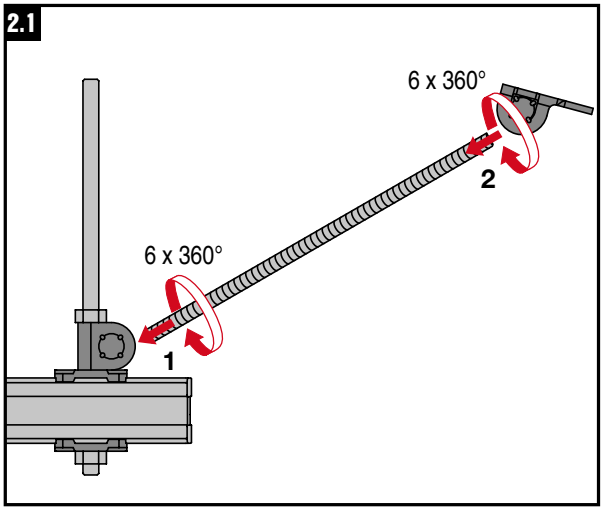

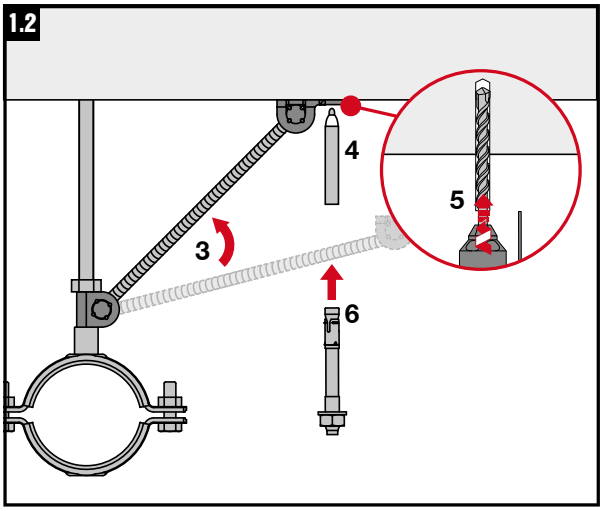

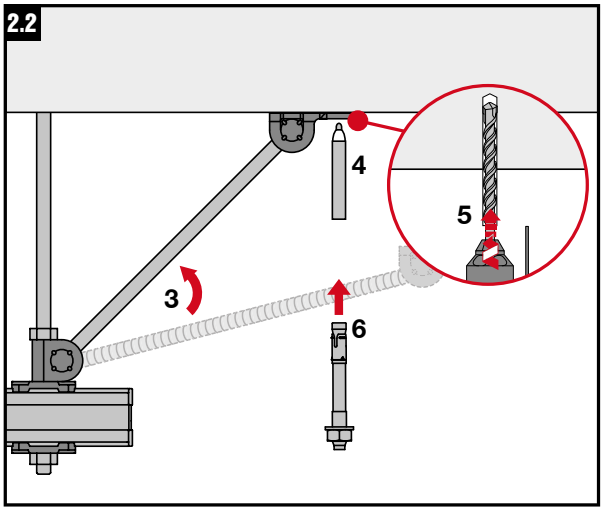

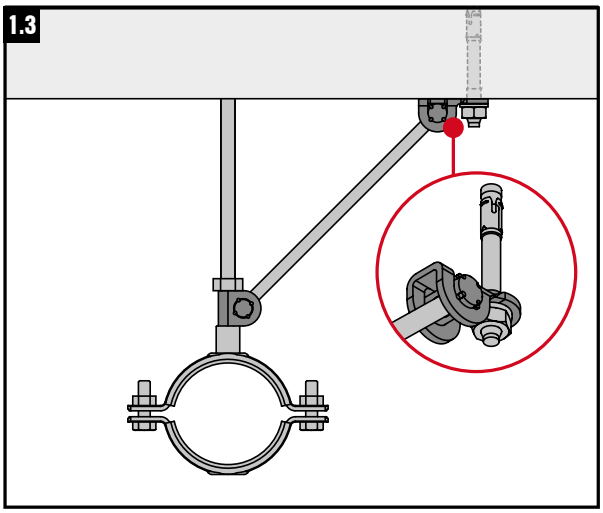

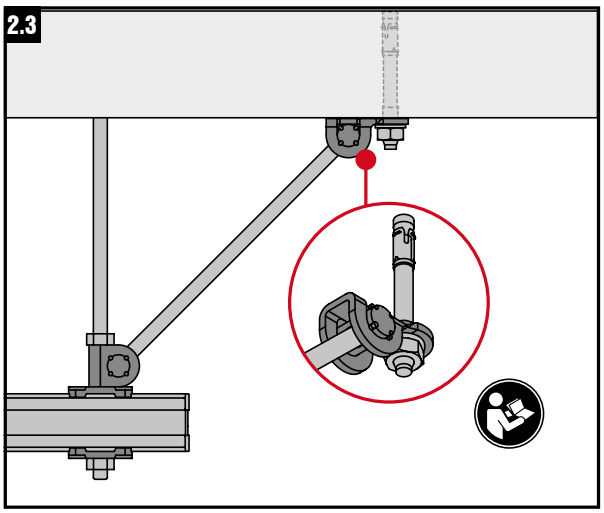

The latest IFU (Instruction For Use) is available on Hilti Online. Please check for any revisions before installing the product.

MT-EDB OC Elevator Connector

Heavy-duty adjustable baseplate for connecting an MT girder horizontally between two parallel walls

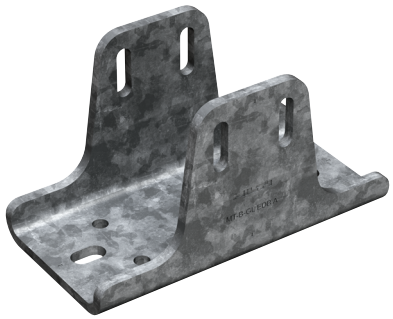

Applications

- Constructing MT-80, MT-90 and MT-100 divider beams/rail guards in elevator shafts
- Fastening long-span, wall-to-wall supports for medium/heavy-load pipes using MT-80, MT-90 or MT-100 girders
- Supports for medium/heavy-load air ducts and cabling between two adjacent walls

Technical data

Material composition	Q355 or better steel
Surface finish	Hot-dip galvanized - for outdoor use

Advantages

- Full adjustability – up to 40 mm along the length of the girder for higher cutting tolerance on the jobsite
- No welding required – for faster, more efficient installation
- Leaner inventory – this new solution uses fewer and lighter components than previous Hilti divider beam connectors, so you can do more with the same parts
- Corrosion resistance – hot-dip galvanized to help protect against moisture and chemical corrosion
- Part of the Hilti MT system – an economical, all-in-one solution for virtually all modular MEP support structures
- Full adjustability – up to 1-5/8” along the length of the girder for higher cutting tolerance on the jobsite

MT-EDB OC Elevator Connector

Order Designation	Technical data	Sales pack quantity	Item number	
MT-B-GL EDB OC set	Outdoor, low to moderate pollution (C3 / C4 - low)	2	**2353802**	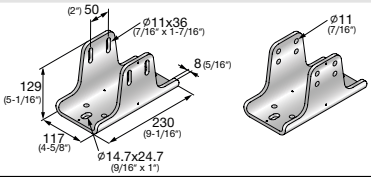
MT-B-GL EDB A OC		4	**2353803**	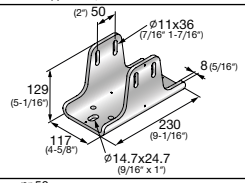
MT-B-GS EDB OC set		3	**2353804**	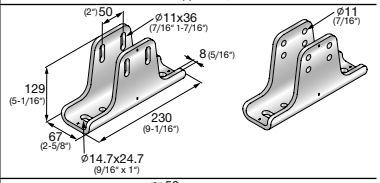
MT-B-GS EDB A OC		6	**2353805**	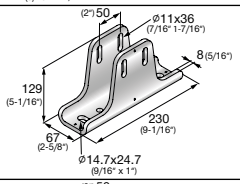
MT-B-EDB A OC		10	**2353810**	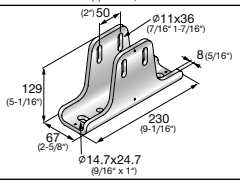

MT-EDB Elevator Connector

Heavy-duty adjustable baseplate for connecting an MT girder horizontally between two parallel walls

Applications

- Constructing MT-80, MT-90 and MT-100 divider beams/rail guards in elevator shafts
- Fastening long-span, wall-to-wall supports for medium/heavy-load pipes using MT-80, MT-90 or MT-100 girders
- Supports for medium/heavy-load air ducts and cabling between two adjacent walls

Technical data

Material composition	Q355 or better steel
Surface finish	Pre-galvanized - for dry indoor use only

Advantages

- Full adjustability – up to 40 mm along the length of the girder for higher cutting tolerance on the jobsite
- No welding required – for faster, more efficient installation
- Leaner inventory – this new solution uses fewer and lighter components than previous Hilti divider beam connectors, so you can do more with the same parts
- Corrosion resistance – hot-dip galvanized to help protect against moisture and chemical corrosion
- Part of the Hilti MT system – an economical, all-in-one solution for virtually all modular MEP support structures
- Full adjustability – up to 1-5/8” along the length of the girder for higher cutting tolerance on the jobsite

MT-EDB Elevator Connector

Order Designation	Technical data	Sales pack quantity	Item number	
MT-BRL-EDB M12	Dry indoor conditions (C1) Indoor with temporary condensation (C2)	10	**2353806**	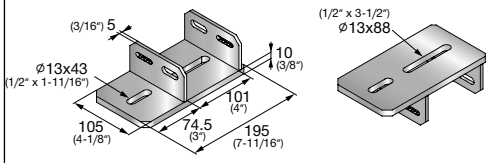
MT-BRL-EDB M16		10	**2353807**	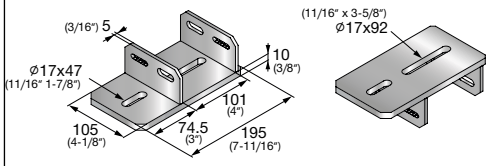
MT-BRS-EDB M12		6	**2353808**	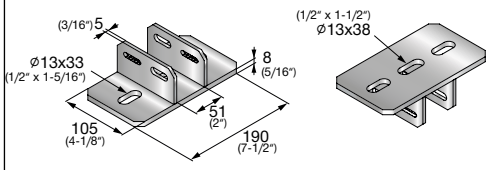
MT-BRS-EDB M16		6	**2353809**	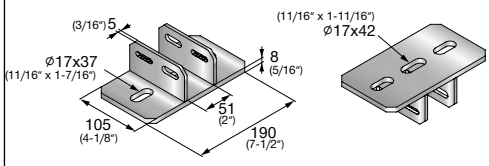

10

Technical data Elevator Divider Beams

Item image	Load drawing	Order Designation	Fx	Fy	Fz
	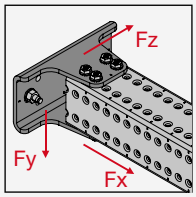	**MT-B-GL EDB**	36,51 kN	7,31 kN	18,09 kN
	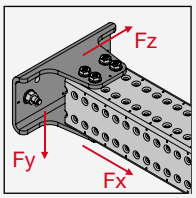	**MT-B-GL EDB A**	2,69 kN	4,97 kN	18,09 kN
	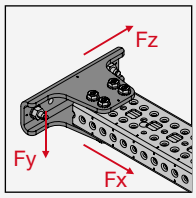	**MT-B-GS EDB**	42,29 kN	3,87 kN	15,53 kN
	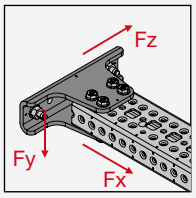	**MT-B-GS EDB A**	1,35 kN	3,75 kN	15,53 kN
	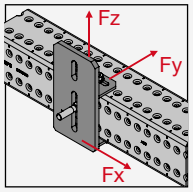	**MT-BRL EDB M12**	15,05 kN	12,04 kN	2,67 kN
	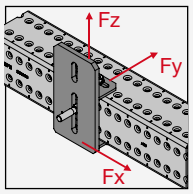	**MT-BRL EDB M16**	15,05 kN	12,04 kN	2,67 kN
	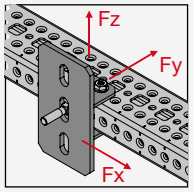	**MT-BRS EDB M12**	14,00 kN	10,13 kN	2,67 kN
	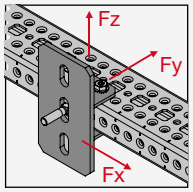	**MT-BRS EDB M16**	14,00 kN	10,13 kN	2,67 kN

10

MT-B-GL EDB OC

Operation instruction

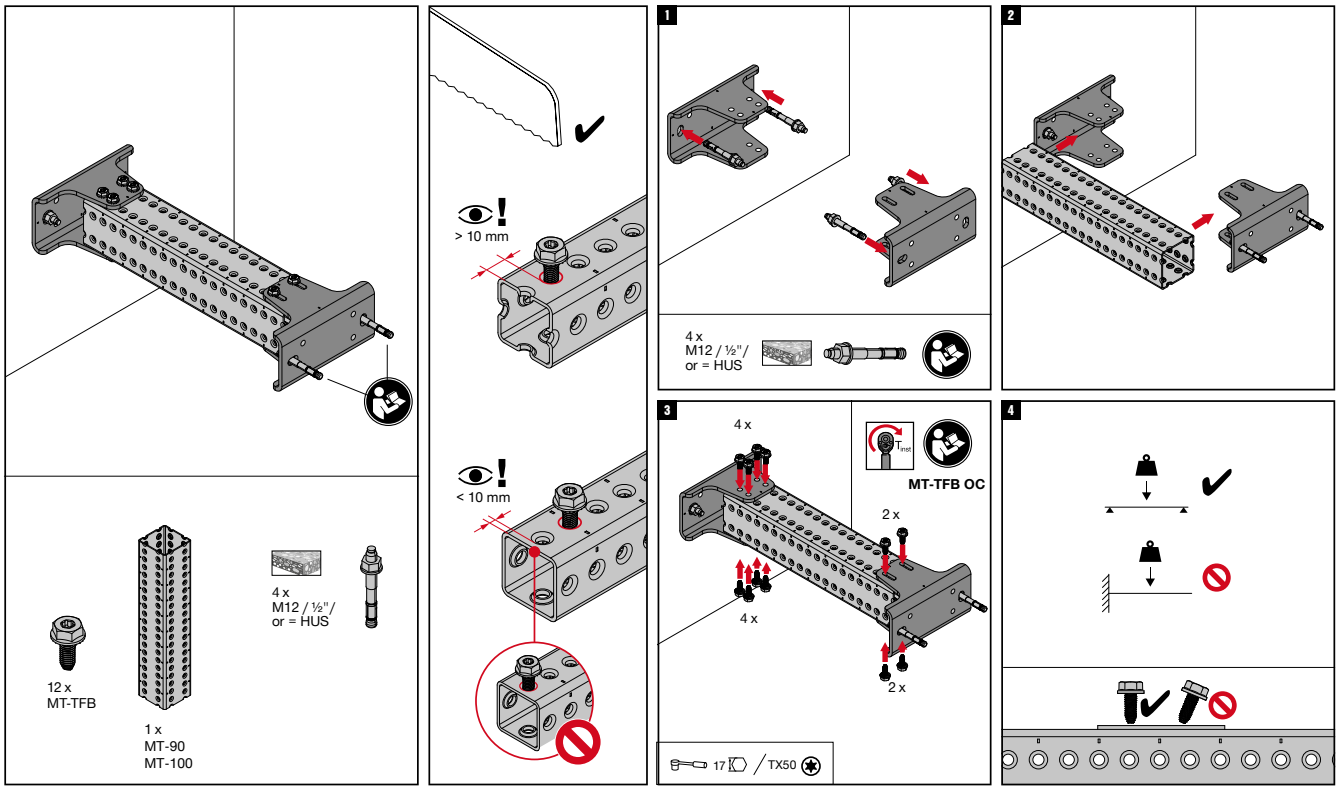

The latest IFU (Instruction For Use) is available on Hilti Online. Please check for any revisions before installing the product.

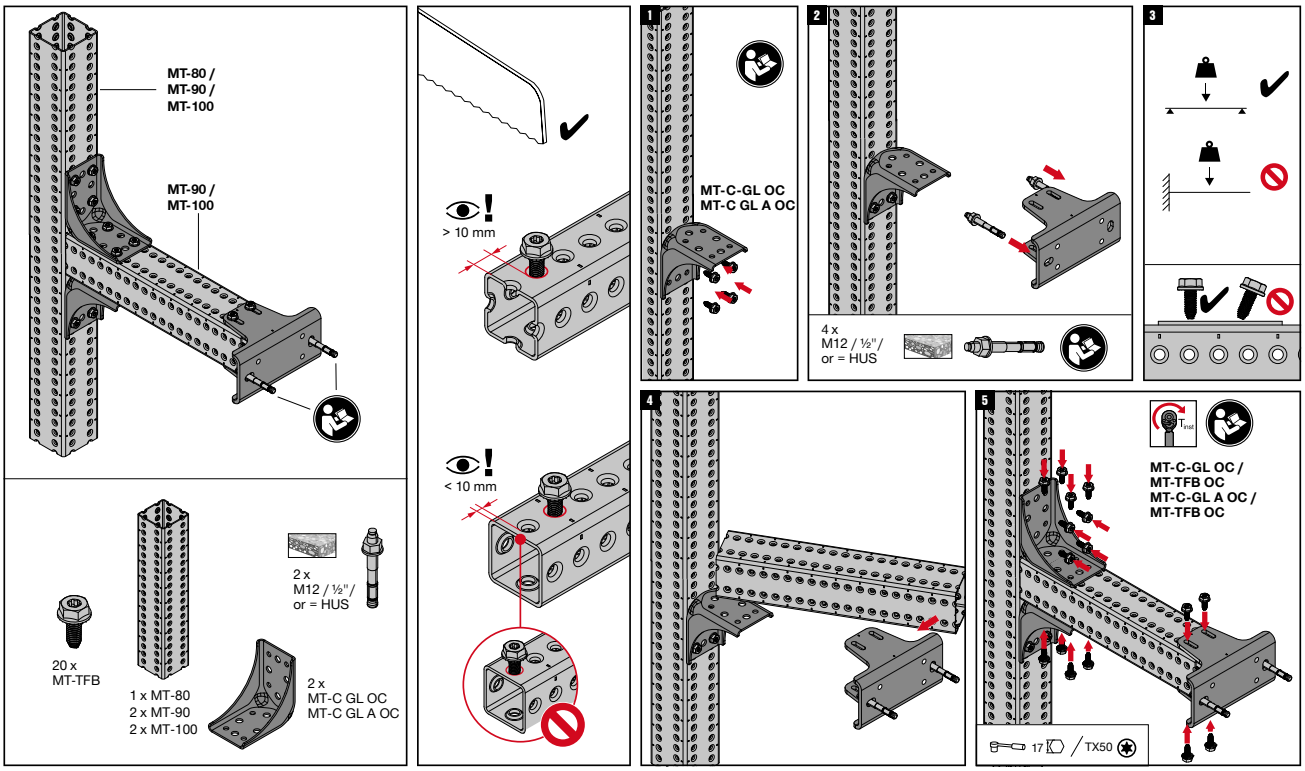

The latest IFU (Instruction For Use) is available on Hilti Online. Please check for any revisions before installing the product.

10

MT-B-GS EDB OC

Operation instruction

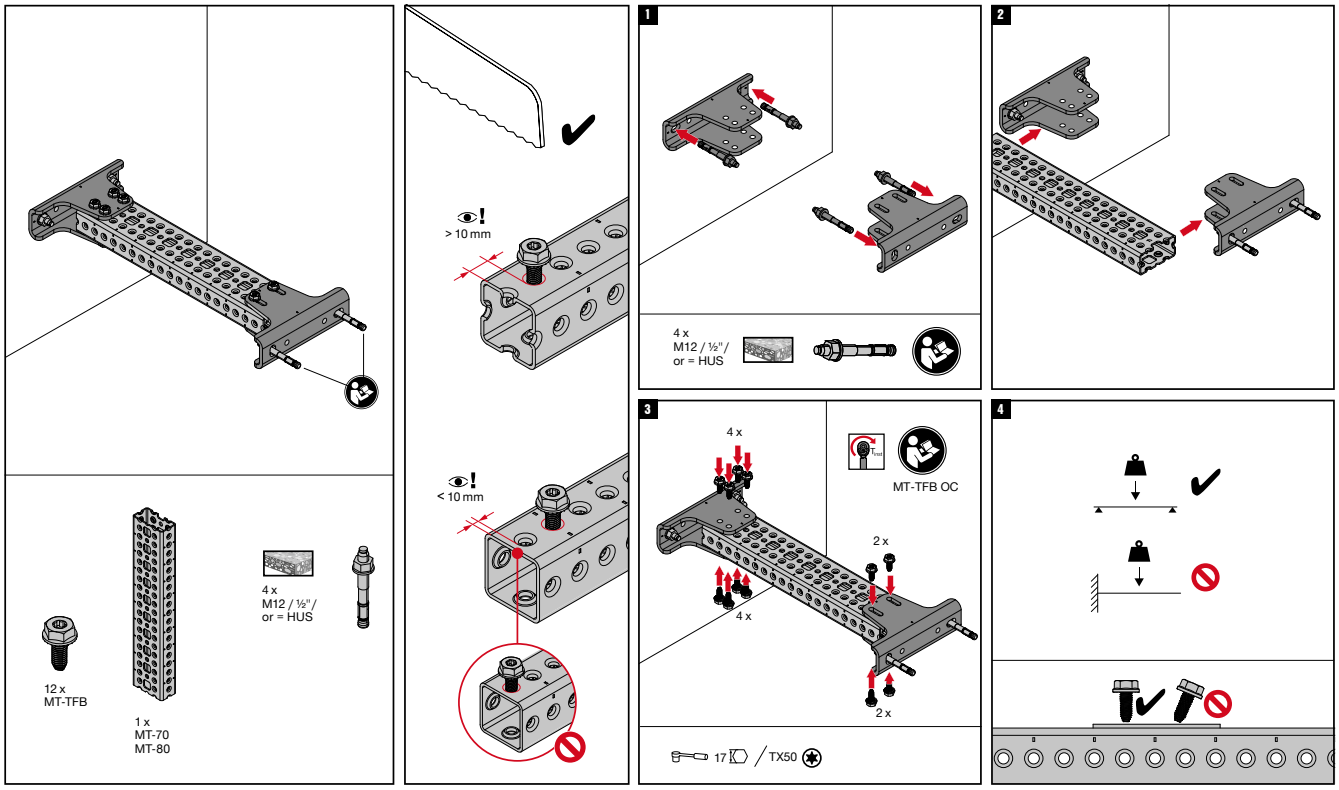

The latest IFU (Instruction For Use) is available on Hilti Online. Please check for any revisions before installing the product.

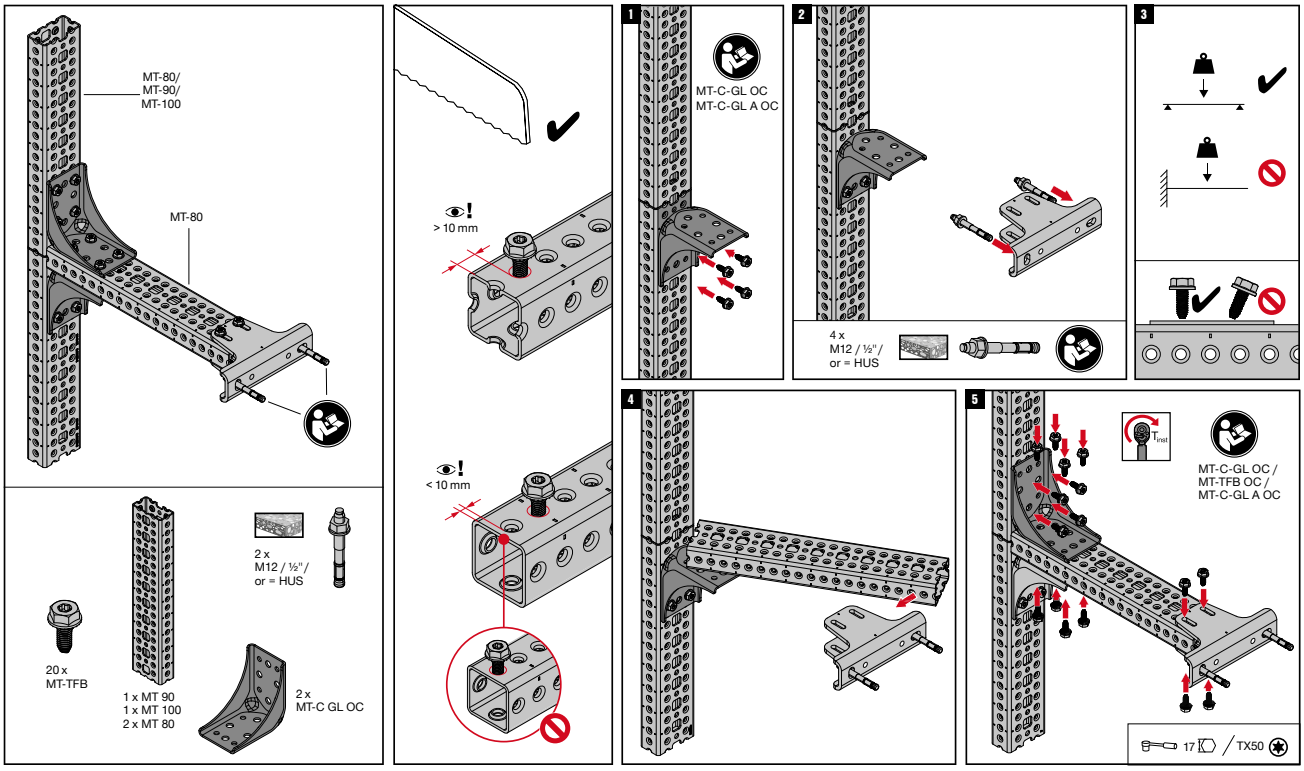

The latest IFU (Instruction For Use) is available on Hilti Online. Please check for any revisions before installing the product.

10

MT-BRL EDB

Operation instruction

2359999-08.2022

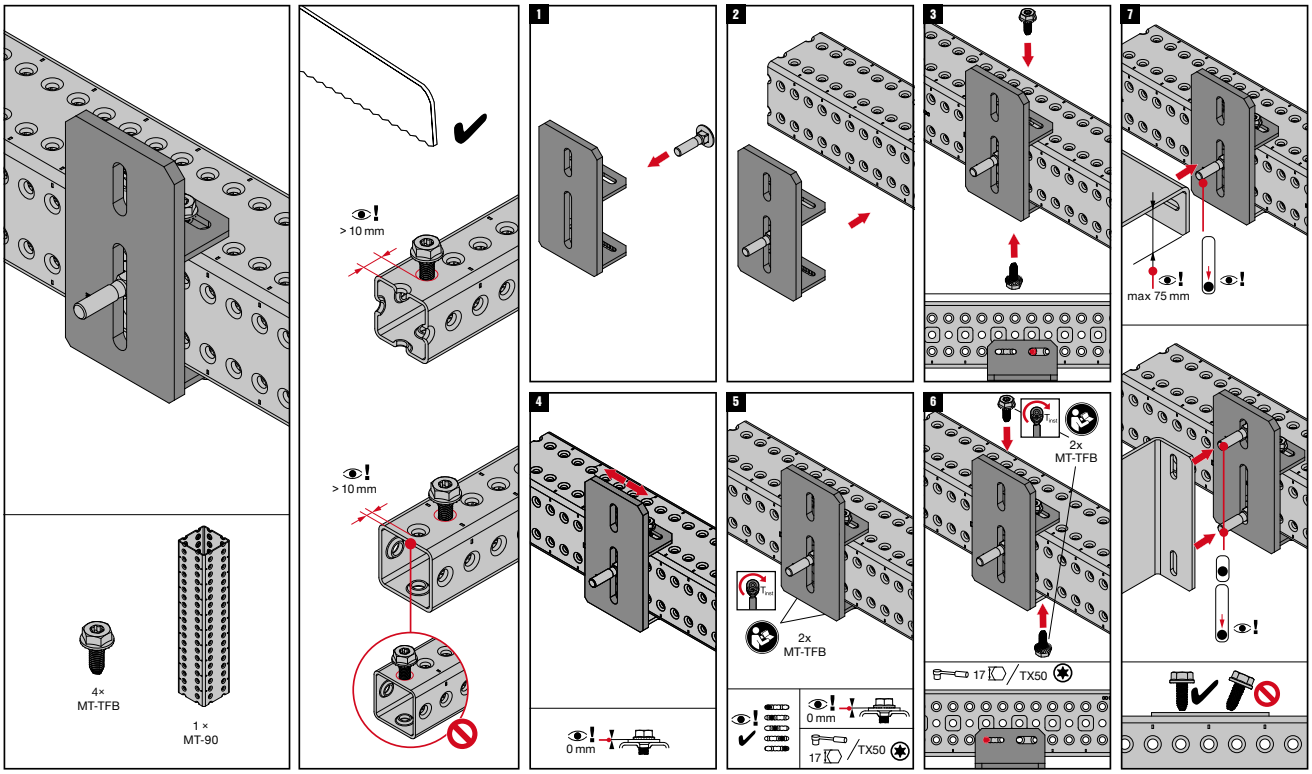

The latest IFU (Instruction For Use) is available on Hilti Online. Please check for any revisions before installing the product.

MT-BRS EDB

Operation instruction

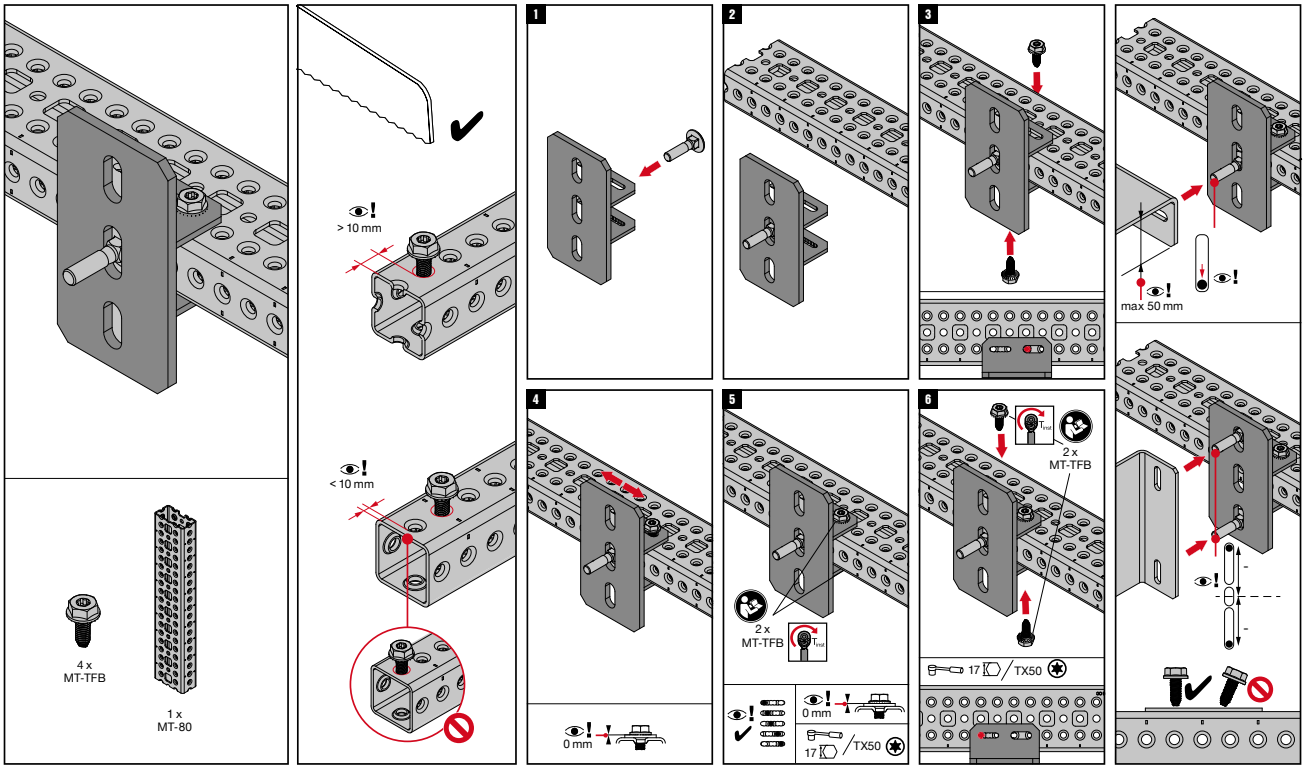

The latest IFU (Instruction For Use) is available on Hilti Online. Please check for any revisions before installing the product.

10

MT-B EDB A OC

Operation instruction
MT-B EDB A OC

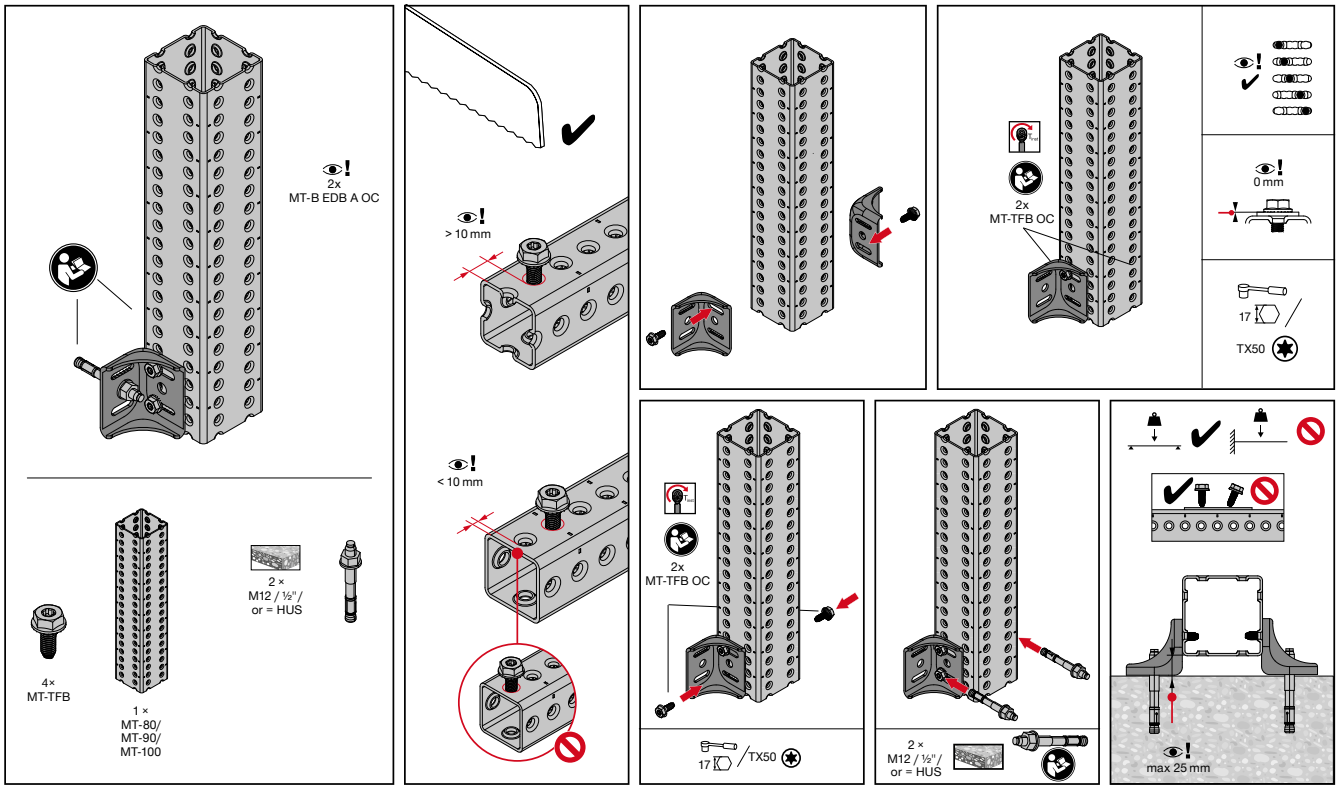

The latest IFU (Instruction For Use) is available on Hilti Online. Please check for any revisions before installing the product.

Hilti Corporation
9494 Schaan Liechtenstein
Tel.: +423-234 2111

www.facebook.com/hiltigroup
www.hilti.group