Austrian Institute of Construction Engineering
Schenkenstrasse 4 | T +43 1 533 65 50
1010 Vienna | Austria | F +43 1 533 64 23
www.oib.or.at | mail@oib.or.at

Designated according to Article 29 of Regulation (EU) No 305/2011

Member of EOTA
www.eota.eu

European Technical Assessment

ETA-10/0292 of 17.01.2024

General part

Technical Assessment Body issuing the European Technical Assessment	Österreichisches Institut für Bautechnik (OIB) Austrian Institute of Construction Engineering
Trade name of the construction product	Hilti Firestop Acrylic Sealant CFS-S ACR
Product family to which the construction product belongs	Fire Stopping and Fire Sealing Products: Penetration Seals
Manufacturer	Hilti AG Feldkircherstrasse 100 9494 Schaan LIECHTENSTEIN
Manufacturing plant	Hilti production plant 4a
This European Technical Assessment contains	51 pages including Annexes A to D which form an integral part of this assessment.
This European Technical Assessment is issued in accordance with Regulation (EU) No 305/2011, on the basis of	European Assessment Document EAD 350454-00-1104 “Fire stopping and fire sealing products – Penetration seals”
This European Technical Assessment replaces	European Technical Assessement ETA-10/0292 of 30.01.2018

This European Technical Assessment is not to be transferred to manufacturers or agents of manufacturer other than those indicated on page 1, or manufacturing plants other than those laid down in the context of this European Technical Assessment.

Translations of this European Technical Assessment in other languages shall fully correspond to the original issued document and should be identified as such.

Communication of this European Technical Assessment, including transmission by electronic means, shall be in full. However, partial reproduction can be made with the written consent of the Österreichisches Institut für Bautechnik. In this case, partial reproduction has to be designated as such.

This European Technical Assessment may be withdrawn by the Österreichisches Institut für Bautechnik, in particular pursuant to information by the Commission according to Article 25 (3) of Regulation (EU) No 305/2011.

Content

1 Technical description of the product

1.1 Definition of the Construction Product

“Hilti Firestop Acrylic Sealant CFS-S ACR” is a 1-component sealant used to form a pipe penetration seal based on filling substances and acrylic binder.

For further details on “Hilti Firestop Acrylic Sealant CFS-S ACR” see Annex B section 7.1.1.

2 Specification of the intended uses in accordance with the applicable European Assessment Document (hereinafter EAD)

2.1 Intended use

"Hilti Firestop Acrylic Sealant CFS-S ACR" is intended to be used as a pipe penetration seal to temporarily or permanently reinstate the fire resistance performance of different wall and floor constructions where they have been penetrated by metal pipes, plastic pipes and aluminium composite pipes.

The specific elements of construction which "Hilti Firestop Acrylic Sealant CFS-S ACR" may be used to provide penetration seal, are:

- Flexible walls
- Rigid walls
- Rigid floors
- Timber walls
- Timber floors

The maximum opening size of the penetration seal has to comply with the dimensions as specified in the following table. For details see Annex C.

"Hilti Firestop Acrylic Sealant CFS-S ACR" can only be used as penetration seal for metal pipes, plastic pipes, and composite pipes. Further details are given in Annex C. Other parts or service support constructions shall not penetrate the penetration seal.

2.2 Use condition

"Hilti Firestop Acrylic Sealant CFS-S ACR" has been tested in accordance with EOTA TR 024, table 4.2 for the Y_2 use category specified in EAD 350141-00-1106 and the results of the test have demonstrated suitability for linear joint and gap seals intended for use at temperatures below 0°C, but with no exposure to rain or UV.

Although a penetration seal is intended for indoor applications only, the construction process may result in it being subjected to more exposed conditions for a period before the building envelope is closed. For this case provisions shall be made to protect temporarily exposed penetration seals according to the ETA-holder's installation instructions.

2.3 Working life

The provisions made in this European Technical Assessment are based on an assumed working life of "Hilti Firestop Acrylic Sealant CFS-S ACR" of 25 years, provided the conditions laid down in the technical literature of the manufacturer relating to packaging, transport, storage, installation, use and repair are met.

The indications given on the intended working life cannot be interpreted as a guarantee given by the producer or the Technical Assessment Body, but are to be regarded only as a means for selecting the appropriate product in relation to the expected economically reasonable working life of the works.

The real working life might be, in normal use conditions, considerably longer without major degradation affecting the Basic requirements for construction works.

2.4 General assumptions

It is assumed that

> damages to the penetration seal are repaired accordingly,

> the installation of the penetration seal does not affect the stability of the adjacent building element – even in case of fire,

> the lintel or floor above the penetration seal is designed structurally and in terms of fire protection such that no additional mechanical load (other than its own weight) is imposed on the penetration seal,

> the installations are fixed to the adjacent building element in accordance with the relevant regulations in such a way that, in case of fire, no additional mechanical load is imposed to the penetration seal,

> the support of the installations is maintained for the required period of fire resistance and

> pneumatic dispatch systems, compressed air systems, etc. are switched off by additional means in case of fire.

This European Technical Assessment does not address any risks associated with the emission of dangerous liquids or gases caused by failure of the pipe(s) in case of fire nor does it prove the prevention of the transmission of fire through heat transfer via the medium in the pipes.

This European Technical Assessment does not verify the prevention of destruction of adjacent building elements with fire separating function or of the pipes themselves due to distortion forces caused by extreme temperatures. These risks shall be accounted for by taking appropriate measures when designing or installing the pipe work.

The mounting or hanging of the pipes or the layout of the pipe work shall be implemented in such a way that the pipes and the fire resistant building elements shall remain functional within a period of time which corresponds to the fire resistance period required.

The risk of downward spread of fire caused by burning material which drips through a pipe to floors below, is not considered in this European Technical Assessment (see EN 1366-3:2021, clause 1).

The durability assessment does not take account of the possible effect on the penetration seal of substances permeating through the pipe walls.

The assessment does not cover the avoidance of destruction of the penetration seal or of the adjacent building element(s) by forces caused by temperature changes in case of fire. This has to be considered when designing the piping system.

2.5 Manufacturing

The European Technical Assessment is issued for the product on the basis of agreed data / information, deposited with the Österreichisches Institut für Bautechnik, which identifies the product that has been assessed and judged. Changes to the product or production process, which could result in this deposited data / information being incorrect, should be notified to the Österreichisches Institut für Bautechnik before the changes are introduced.

The Österreichisches Institut für Bautechnik will decide whether or not such changes affect the European Technical Assessment and consequently the validity of the CE marking on the basis of the European Technical Assessment and if so whether further assessment or alterations to the European Technical Assessment, shall be necessary.

3 Performance of the product and references to the methods used for its assessment

3.1 Performance of the product

The assessment of fitness for use has been made in accordance with EAD 350454-00-1104 (September 2017), summarized as follows:

Basic requirements for construction works	Essential characteristic	Method of verification	Performance
BWR 2	Reaction to fire	EN 13501-1	clause 3.2
	Resistance to fire	EN 13501-2	clause 3.3 and Annex 8
BWR 3	Air permeability (material property)	EN 1026	clause 3.4
	Water permeability (material property)	EAD 350454-00-1104, Annex C	clause 3.5
	Content and/or release of dangerous substances	EN 16516	clause 3.6
BWR 4	Mechanical resistance and stability	No performance assessed	
	Resistance to impact / movement	No performance assessed	
	Adhesion	No performance assessed	
	Durability	EAD 350454-00-1104 clause 2.2.9	clause 3.10
BWR 5	Airborne sound insulation	EN ISO 10140-1	clause 3.11
BWR 6	Thermal properties	No performance assessed	
	Water vapour permeability	No performance assessed	

3.2 Reaction to fire

“Hilti Firestop Acrylic Sealant CFS-S ACR” was assessed according to EAD 350454-00-1104 clause 2.2.1 and classified according to EN 13501-1:2018.

Component	Class according to EN 13501-1
Hilti Firestop Acrylic Sealant CFS-S ACR	D-s1,d0

3.3 Resistance to fire

“Hilti Firestop Acrylic Sealant CFS-S ACR” was tested according to EAD 350454-00-1104 clause 2.2.2, EN 1366-3:2009 and EN 1366-3:2021.

Based upon the gained test results and the field of application specified within EN 1366-3:2021 the penetration seal “Hilti Firestop Acrylic Sealant CFS-S ACR” has been classified according to EN 13501-2. The individual fire resistance classes are listed in Annex C – resistance to fire.

The maximum fire resistance class of the penetration seal in vertical or horizontal separating elements depends on the fire resistance class of the penetrating elements. The fire resistance class of the penetration seal is reduced to the fire resistance class of the penetrating element with the lowest fire resistance classification.

3.4 Air permeability

The air permeability of “Hilti Firestop Acrylic Sealant CFS-S ACR” with a thickness of 25 mm on both sides of the wall was tested according to EN 1026:2000 and EN 12211:2000 in an aerated concrete wall. The dimension of the tested joint was 1000 mm x 50 mm.

Up to a pressure difference 600 Pa no air permeability was measured. Up to a pressure difference of 9700 Pa the joint did not show any damage.

3.5 Water permeability

The water permeability has been tested using the principles of the test procedure according to EAD 350454-00-1104, Annex C. The specimen consisted of 2 mm “Hilti Firestop Acrylic Sealant CFS-S ACR” (dry film thickness) on mineral wool. Test result: Water tight to 1000 mm head of water.

3.6 Content, emission and/or release of dangerous substances

The content of semi-volatile organic compounds (SVOC) and volatile organic compounds (VOC) in “Hilti Firestop Acrylic Sealant CFS-S ACR” is assessed according to EN 16516. The loading factor for emission testing was 0,007 m^2/m^3 according to EAD 350141-00-1106.

The concentration of total emission of SVOC after 3 days was less than 0,005 mg/m^3, after 28 days the concentration was less than 0,005 mg/m^3. The concentration of total emission of VOC after 3 days was 0,8 mg/m^3, after 28 days the concentration was 0,13 mg/m^3.

3.7 Mechanical resistance and stability

No performance assessed.

3.8 Resistance to impact / movement

No performance assessed.

3.9 Adhesion

No performance assessed.

3.10 Durability

All components of “Hilti Firestop Acrylic Sealant CFS-S ACR” fulfil the requirements for the intended use condition. “Hilti Firestop Acrylic Sealant CFS-S ACR” is therefore appropriate for use at temperatures below 0°C, but with no exposure to rain nor UV and can – according to EAD 350454-00-1104 clause 2.2.9.3.1 – be categorized as Type Y_2. Since the requirements for Type Y_2 are met, also the requirements for Type Z_1 and Z_2 are fulfilled.

3.11 Airborne sound insulation

Test reports from noise reduction according to EN ISO 10140-1:2010+A1:2012+A2:2014, EN ISO 10140-2:2010 and EN ISO 717-1:2013 have been provided. The tests were performed in a joint (length 1200 mm, depth 100 mm, width 25 mm) in a rigid wall backfilled with compressed mineral wool. Installation depth of “Hilti Firestop Acrylic Sealant CFS-S ACR” was 12 mm on both sides of the wall.

The reached values for the airborne sound insulation are given in the following table.

$R_{s,w}$ in dB	C in dB	C_{tr} in dB
64	-2	-7

3.12 Thermal properties

No performance assessed.

3.13 Water vapour permeability

No performance assessed.

4 Assessment and verification of constancy of performance (hereinafter AVCP) system applied, with reference to its legal base

According to the Decision 1999/454/EC[1], amended by Decision 2001/596/EC[2] of the European Commission the system(s) of assessment and verification of constancy of performance (see Annex V of Regulation (EU) No 305/2011) is given in the following table.

Product(s)	**Intended use(s)**	**Level(s) or class(es)** (resistance to fire)	**System** of assessment and verification of constancy of performance
Fire Stopping and Fire Sealing Products	for fire compartmentation and/or fire protection or fire performance	any	1

In addition, according to the Decision 1999/454/EC, amended by Decision 2001/596/EC of the European Commission the system(s) of assessment and verification of constancy of performance, with regard to reaction to fire, is 3.

Product(s)	**Intended use(s)**	**Level(s) or class(es)** (reaction to fire)	**System** of assessment and verification of constancy of performance
Fire Stopping and Fire Sealing Products	For uses subject to regulations on reaction to fire	A1*, A2*, B*, C*	1
		A1**, A2**, B**, C**, D, E	3
		(A1 to E)***, F	4

* Products/materials for which a clearly identifiable stage in the production process results in an improvement of the reaction to fire classification (e.g. an addition of fire retardants or a limiting of organic material)

** Products/materials not covered by footnote (*)

*** Products/materials that do not require to be tested for reaction to fire (e.g. products/materials of class A1 according to Commission Decision 96/603/EC, as amended)

[1] Official Journal of the European Communities no. L 178, 14.7.1999, p. 52
[2] Official Journal of the European Communities no. L 209, 2.8.2001, p. 33

5 Technical details necessary for the implementation of the AVCP system, as provided for in the applicable EAD

Technical details necessary for the implementation of the AVCP system are laid down in the control plan deposited with the Technical Assessment Body Österreichisches Institut für Bautechnik.

The notified product certification body shall visit the factory at least twice a year for surveillance of the manufacturer.

Issued in Vienna on 17.01.2024
by Österreichisches Institut für Bautechnik

The original document is signed by:

Thomas Rockenschaub
Deputy Managing Director

6 Annex A – reference documents/standards

6.1 Reference to standards mentioned in the ETA

EN 1026	Windows and doors – Air permeability – Test method
EN 1366-3	Fire resistance tests for service installations – Part 3: Penetration seals
EN 13501-1	Fire classification of construction products and building elements – Part 1: classification using test data from reaction to fire tests
EN 13501-2	Fire classification of construction products and building elements – Part 2: classification using test data from fire resistance tests
EN 16516	Construction products: Assessment of release of dangerous substances - Determination of emissions into indoor air
EN ISO 717-1	Acoustics – Rating of sound insulation of buildings and of building elements – Part 1: Airborne sound insulation
EN ISO 10140	Acoustics – Laboratory measurement of sound insulation of building elements Part 2: Measurement of airborne sound insulation Part 3: Measurement of impact sound insulation
EN 300	Oriented Strand Boards (OSB) - Definitions, classification and specifications
EN 338	Structural timber - Strength classes
EN 520	Gypsum plasterboards - Definitions, requirements and test methods
EN 16351	Timber structures - Cross laminated timber - Requirements
EN 13986	Wood-based panels for use in construction - Characteristics, evaluation of conformity and marking

6.2 Other reference documents

EOTA TR 024	Characterisation, Aspects of Durability and Factory Production Control for Reactive Materials, Components and Products
ETA-06/0009	Binderholz Brettsperrholz BBS (cross laminated timber - Binderholz Bausysteme GmbH))
ETA-10/0241 / Z-9.1-501	Leno Brettsperrholz (cross laminated timber - Züblin Timber GmbH)
ETA-11/0137	LIGNATUR-box element (LKE), -surface element (LFE) and -shell element (LSE) (prefabricated wood-based loadbearing stressed skin panels - Lignatur AG)

7 Annex B – the product CFS-S ACR

7.1 Description of product and ancillary product(s)

See also www.hilti.group and choose your local country

7.1.1 Hilti Firestop Acrylic Sealant CFS-S ACR

Hilti Firestop Acrylic Sealant CFS-S ACR is a:
1-component product and is composed essentially of filling substances and an acrylic binder.

It is available in:
cartridge 310 ml
foil bag 580 ml
pail 5 l / 10 l / 19 l

A detailed specification of the product is contained in document “Identification / Product Specification relating to the European technical assessment ETA-10/0292 and ETA-10/0389, Hilti Firestop Acrylic Sealant CFS-S ACR” which is a non-public part of this ETA.

The Control Plan is defined in document "Control Plan relating to the European technical approval ETA-10/0292 and ETA 10/0389 – Hilti Firestop Acrylic Sealant CFS-S ACR", which is a non-public part of this ETA.

7.1.2 Dispenser

Hilti CFS-DISP
Hilti CS 270-P1
Hilti CD 4-A22

7.1.3 Mineral wool products as backfilling material

Loose stone wool or stone wool mats with a minimum density of 45kg/m³.

7.1.4 Mineral wool for insulation

Mineral wool products suitable as pipe insulation material

manufacturer	product designation	specification
Hilti	CFS-TB ISO	Product data sheet of manufacturer
Isover	Protect BSR 90 alu	Product data sheet of manufacturer
Paroc	PAROC Section AluCoat T	Product data sheet of manufacturer
Rockwool	Conlit 150 P	Product data sheet of manufacturer
Rockwool	Klimarock	Product data sheet of manufacturer
Rockwool	Rockwool 800 pipe sections	Product data sheet of manufacturer
Isover	Sleeve, U Protect pipe Section Alu2	DOC 0751-CPD.2-003.0-04 Product data sheet of manufacturer

7.1.5 OKTAGON formwork tie rod system ("Schalungsspannstelle")

formwork	tie rod system / HDPE	
lengths [mm]	≤ 600	
inner diameter [mm]	22	
diameter protection flank [mm]	60	
manufacturer	Nevoga GmbH, Freilassing, Germany (www.nevoga.com)	

7.1.6 Formwork distance control pipe ("Abstandsrohr")

formwork	weather resistant plastic pipe / PVC	
lengths [mm]	2000 to 2500 (to cut)	
inner diameter [mm]	26	
diameter protection flank [mm]	32	
manufacturer	Nevoga GmbH, Freilassing, Germany (www.nevoga.com)	

7.1.7 Technical product literature

- Technical Product Information CFS-S ACR – see www.hilti.group
- Instruction for Use (see 9 Annex C)
- Material Safety Data Sheet (MSDS)

8 Annex C – resistance to fire

8.1 intended use of joints and reference to relevant sections

Standard supporting construction – walls		See section:		
application	penetration material	flexible and rigid wall ≥ 100 mm	rigid wall ≥ 150 mm, ≥ 550 kg/m³, pipes without insulation	rigid wall ≥ 200 mm
heating pipes, potable water pipes	copper; steel, stainless steel	8.3.1 8.3.2	8.4.1 8.4.2	-
	alu-composite	8.3.1 8.3.2	-	-
distance pipe	plastic	-	-	8.5.1

Standard supporting construction – floors		See section:		
application	penetration material	rigid floor ≥ 150 mm, ≥ 550 kg/m³	rigid floor ≥ 150 mm, ≥ 2400 kg/m³	rigid floor ≥ 150 mm, ≥ 550 kg/m³, pipes without insulation
heating pipes, potable water pipes	copper; steel, stainless steel	8.7.1 8.7.2.1 8.7.2.2	8.8.1 8.8.2	8.9
	alu-composite	8.7.1 8.7.2.1	8.8.1 8.8.2	-

Timber supporting construction – CLT walls		See section:		
application	penetration material	≥ 80 mm	≥ 100 mm	≥ 148 mm
heating pipes, potable water pipes	copper; steel, stainless steel	8.6.1.1	8.6.1.2	8.6.2
	alu-composite	8.6.1.1	8.6.1.2	8.6.2

Timber supporting construction – CLT floors		See section:				
application	penetration material	≥ 80 mm	≥ 100 mm	≥ 140 mm	≥ 220 mm	≥ 120 mm
heating pipes, potable water pipes	copper; steel, stainless steel	8.10.1.1	8.10.1.2	8.10.1.3	8.10.2	8.10.3
	alu-composite	8.10.1.1	8.10.1.2	8.10.1.3	-	-

Timber supporting construction – floors		See section:	
application	penetration material	Lignatur floor ≥ 160 mm	Wood frame floor ≥ 236 mm
heating pipes, potable water pipes	copper; steel, stainless steel	8.11	8.12
	alu-composite	8.11	-

8.2 general Information

8.2.1 first support for pipe penetrants

distances of first support from supporting constructions	
flexible and rigid wall (identical on both sides of the wall):	rigid floor, Binderholz BBS 90 floor (top side only)
250 mm	250 mm
Binderholz Brettsperrholz BBS wall (identical on both sides of the wall):	Binderholz Brettsperrholz BBS floor, Lignatur (top side only)
450 mm	450 mm
Leno CLT wall (identical on both sides of the wall):	Leno CLT, Lignatur element wood frame floor (top side only)
350 mm	350 mm

8.2.2 minimum distances for penetrations

- minimum distance between CFS-S ACR seals and other seals is min. 100 mm
- for distances of specific seals concerning the supporting construction Binderholz Brettsperrholz BBS see e.g., section 8.6.1.2 and 8.10.1.3
- the distances are valid for single penetrations

8.2.3 annular space

Annular space (w_A) rising from distance of a penetrating service to void edge is in some cases depending on service diameter, typically from 0 mm to 15 mm. In all other cases the annular space value is ranging from min. up to max. value and is stated at specific section 8.3 and following.
Depth of CFS-S ACR (t_A) application see specific section.

8.2.4 mineral wool pipe insulation

Mineral wool pipe insulation, installed in LS (local sustained) or CS (continued sustained) – if not other indicated in specific section Type: See also 7.1.4
Reaction to Fire class: A2L-s1, d0 acc. EN 13501-1 or better (A1)
Melting Point: > 1000°C acc. DIN 4102-17
For the insulation type LS described in this ETA the pipe insulation thickness can be increased rather than using the insulation type CS.

8.2.5 metal pipes

The field of application given in 8 “Annex C – resistance to fire” for copper pipes is also valid for other metal pipes with lower heat conductivity than copper and a melting point of at least equal to the material tested, so

- copper – pipe testing include:
  - steel pipes
  - cast iron
  - stainless steel
  - Ni-alloys and
  - Ni too

8.3 flexible and rigid walls ($t_E \geq 100$ mm)

- minimum thickness of ($t_E \geq 100$ mm)
- comprise timber or steel studs
- lined on both faces of minimum 12,5 mm thick gypsum plasterboards acc. EN 520 Type F
- wall construction must be set up according to requirements given in EN 1366-3

additionally for flexible wall with timber studs:

- minimum distance of 100 mm between seal to any stud
- there must be a cavity between studs
- minimum 100 mm insulation of class A1 or A2 (acc. EN 13501-1) must remain in the cavity between stud and seal

additionally for flexible wall with metal studs:

- space between linings has not to be filled completely with insulation material

general

- a higher number of board layers is accepted if the overall board layer thickness is equal or bigger than tested
- a higher overall board layer thickness is accepted, if the number of board layers is equal or bigger than tested
- gypsum plasterboards according to EN 520 type F or according to the specification of the tested and approved flexible wall construction system according to EN 13501-2

a flexible wall can be substituted by a rigid wall

- must comprise concrete, aerated concrete, brickwork, or masonry
- minimum density of 350 kg/m³

8.3.1 flexible and rigid walls - continued pipe insulation

sustained insulation	interrupted insulation
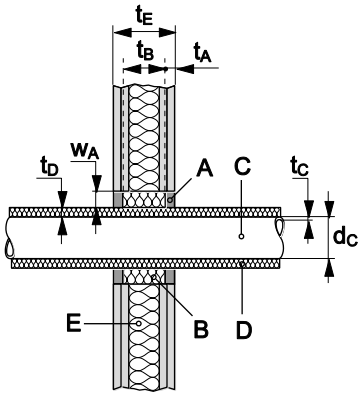	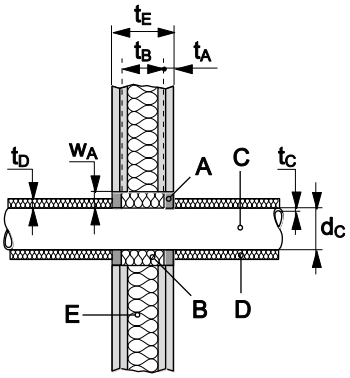
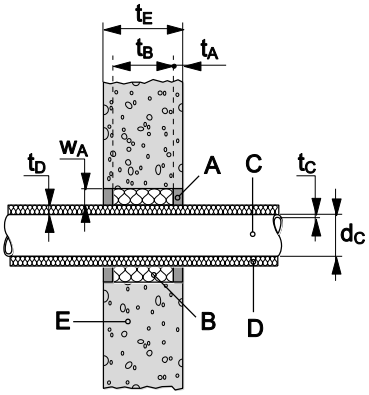	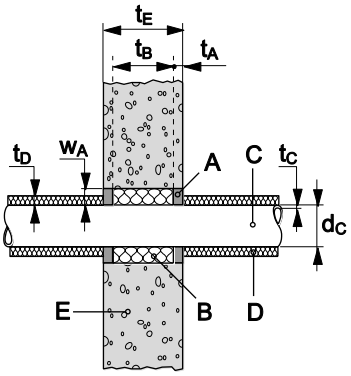

t_A ≥ 10 mm Hilti Firestop Acrylic Sealant CFS-S ACR (A) on both sides
(B) mineral wool according to 7.1.3
t_B = gap filled: ≥ 80 mm
maximum round seal diameter: 300 mm (annular space w_A depending on pipe diameter)
pipe insulation (D) made of mineral wool according to 7.1.4

blank seal	classification
	EI 120

steel pipes (C) with continued insulation (D) – sustained or interrupted				
pipe		insulation		classification
diameter (d_C) [mm]	wall thickness (t_C) [mm]	thickness (t_D) [mm]	length (L_D) [mm]	
≤ 26,9 - 48,3	1,4 / 1,6 - 14,2	≥ 20	-	EI 120 C/U
26,9 - 168,3	1,4 / 2,6 - 14,2	≥ 40	-	EI 120 C/U

copper pipes (C) with continued insulation (D) – sustained				
pipe		insulation		classification
diameter (d_C) [mm]	wall thickness (t_C) [mm]	thickness (t_D) [mm]	length (L_D) [mm]	
≤ 28 - 42	1,0 / 1,5 - 14,2	≥ 20	-	EI 120 C/U
42 - 88,9	1,5 / 2,0 - 14,2	≥ 40	-	EI 90 C/U E 120 C/U

copper pipes (C) with continued insulation (D) – interrupted				
pipe		insulation		classification
diameter (d_C) [mm]	wall thickness (t_C) [mm]	thickness (t_D) [mm]	length (L_D) [mm]	
≤ 28 - 42	1,0 / 1,5 - 14,2	≥ 20	-	EI 120 C/U
42 - 88,9	1,5 / 2,0 - 14,2	≥ 40	-	EI 120 C/U
aluminium composite pipe (Geberit Mepla) (C) with continued insulation (D) – sustained				
pipe		insulation		classification
diameter (d_C) [mm]	wall thickness (t_C) [mm]	thickness (t_D) [mm]	length (L_D) [mm]	
16 - 32	2,25 - 3,5	≥ 20	-	EI 120 U/C

8.3.2 flexible and rigid walls - local pipe insulation

sustained insulation	interrupted insulation
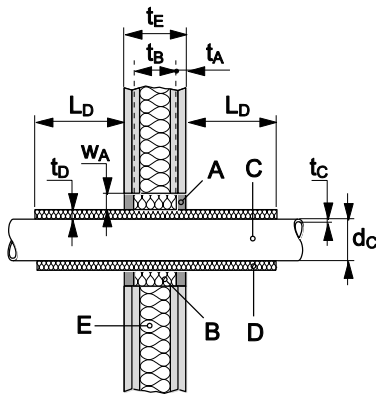	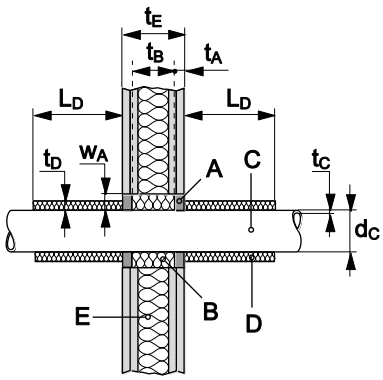
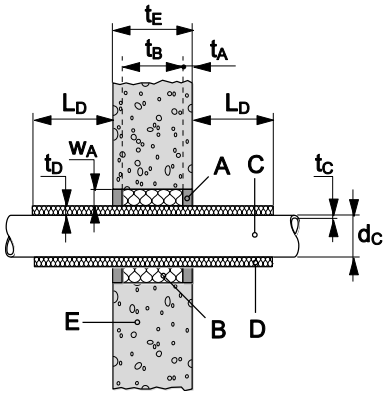	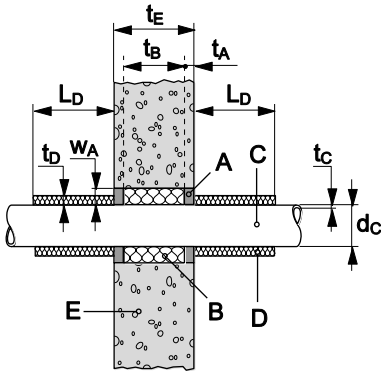

t_A ≥ 10 mm Hilti Firestop Acrylic Sealant CFS-S ACR (A) on both sides
(B) mineral wool according to 7.1.3
t_B = gap filled completely: ≥ 80 mm
maximum seal diameter: 300 mm (annular space w_A depending on pipe diameter)
pipe insulation (D) made of mineral wool according to 7.1.4

blank seal	classification
	EI 120

steel pipes (C) with local insulation (D) – sustained

pipe		insulation		classification
diameter (d_C) [mm]	wall thickness (t_C) [mm]	thickness (t_D) [mm]	length (L_D) [mm]	
≤ 26,9 - 48,3	1,4 / 1,6 - 14,2	20	≥ 450	EI 120 C/U
≤ 48,3 - 168,3	1,6 / 2,6 - 14,2	40	≥ 500	EI 120 C/U

steel pipes (C) with local insulation (D) – interrupted

pipe		insulation		classification
diameter (d_C) [mm]	wall thickness (t_C) [mm]	thickness (t_D) [mm]	length (L_D) [mm]	
≤ 26,9 - 48,3	1,4 / 1,6 - 14,2	20	≥ 500	EI 120 C/U
≤ 48,3 - 168,3	1,6 / 2,6 - 14,2	40	≥ 700	EI 120 C/U
≤ 168,3	2,6 - 4,5	40	≥ 500	EI 90 C/U E 120 C/U
≤ 168,3	4,5 - 14,2	40	≥ 500	EI 120 C/U

copper pipes (C) with local insulation (D) – sustained				
pipe		insulation		classification
diameter (d_C) [mm]	wall thickness (t_C) [mm]	thickness (t_D) [mm]	length (L_D) [mm]	
≤ 28 - 42	1,0 / 1,5 - 14,2	20	≥ 450	EI 120 C/U
≤ 42 - 88,9	1,5 / 2,0 - 14,2	40	≥ 500	EI 90 C/U E 120 C/U
≤ 88,9	2,0 - 14,2[4]	40	≥ 700	EI 120 C/U
copper pipes (C) with local insulation (D) – interrupted				
pipe		insulation		classification
diameter (d_C) [mm]	wall thickness (t_C) [mm]	thickness (t_D) [mm]	length (L_D) [mm]	
≤ 28 - 42	1,0 / 1,5 - 14,2	20	≥ 500	EI 120 C/U
≤ 42 - 88,9	1,5 / 2,0 - 14,2	40	≥ 500	EI 120 C/U
aluminium composite pipe (Geberit Mepla) (C) with local insulation (D) – sustained				
pipe		insulation		classification
diameter (d_C) [mm]	wall thickness (t_C) [mm]	thickness (t_D) [mm]	length (L_D) [mm]	
16 - 32	2,25 - 3,0	20	≥ 500	EI 120 C/U

8.4 rigid walls (t_E ≥ 150 mm)

- must comprise concrete
- minimum density of 2400 kg/m³

8.4.1 rigid walls - no insulation

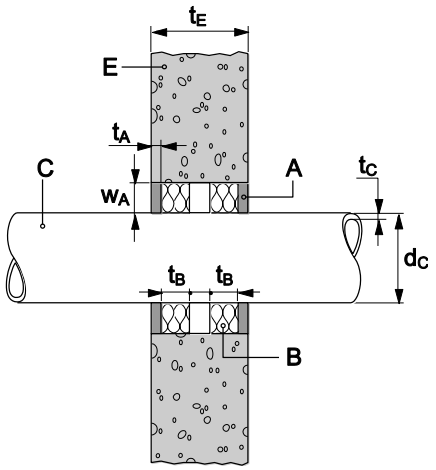

t_A ≥ 15 mm Hilti Firestop Acrylic Sealant CFS-S ACR (A) on both sides
(B) mineral wool according to 7.1.3
t_B = minimum 50 mm on both sides
maximum seal diameter: 300 mm (annular space w_A depending on pipe diameter)

steel pipes (C) non-insulated

pipe		annular space	classification
diameter (d_C) [mm]	wall thickness (t_C) [mm]	[mm]	
≤ 32	1,8 - 14,2	≤ 19	EI 120 C/U
≤ 159	4,5 - 14,2	≤ 35	EI 30 C/U
≤ 32 - 159	1,8 / 4,5 - 14,2	≤ 35	E 180 C/U

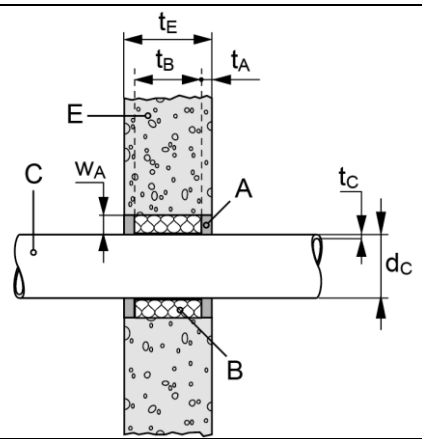

t_A ≥ 15 mm Hilti Firestop Acrylic Sealant CFS-S ACR (A) on both sides
(B) mineral wool according to 7.1.3
t_B = gap filled completely: ≥ 120 mm
maximum seal diameter: 300 mm (annular space w_A depending on pipe diameter)

copper pipes (C) non-insulated			
pipe		annular space	classification
diameter (d_C) [mm]	wall thickness (t_C) [mm]	[mm]	
≤ 22	1,0 - 14,2	≤ 35	EI 20 C/U E 120 C/U

steel pipes (C) non-insulated			
pipe		annular space	classification
diameter (d_C) [mm]	wall thickness (t_C) [mm]	[mm]	
≤ 33,7	3,25 - 14,2	≤ 25	EI 120 C/U

8.4.2 rigid walls - local pipe insulation

sustained insulation	interrupted insulation
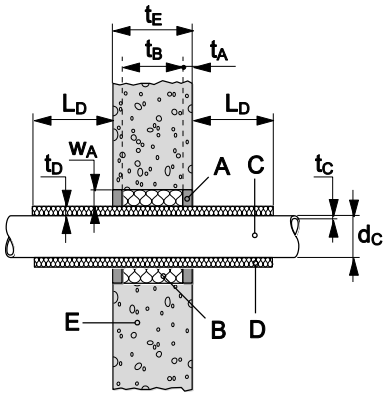	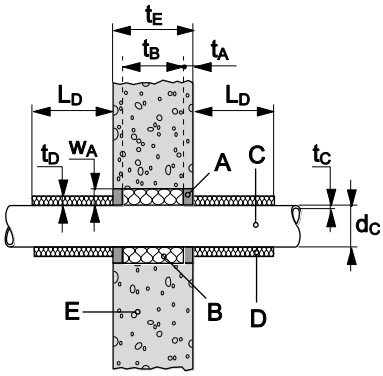

t_A ≥ 20 mm Hilti Firestop Acrylic Sealant CFS-S ACR (A) on the top side of the floor construction,
(B) mineral wool according to 7.1.3
t_B = gap filled completely
annular space (w_A): 10 to 50 mm
pipe insulation (D) made of mineral wool according to 7.1.4

steel pipes (C) with local insulation (D) – sustained				
pipe		insulation		classification
diameter (d_C) [mm]	wall thickness (t_C) [mm]	thickness (t_D) [mm]	length (L_D) [mm]	
≤ 323,9	4,5 - 14,2	60	≥ 1000	EI 120 C/U
steel pipes (C) with local insulation (D) – interrupted				
pipe		insulation		classification
diameter (d_C) [mm]	wall thickness (t_C) [mm]	thickness (t_D) [mm]	length (L_D) [mm]	
≤ 323,9	4,5 - 14,2	60	≥ 1000	EI 120 C/U

8.5 rigid walls (t_E ≥ 200 mm)

A rigid wall

- must comprise concrete, aerated concrete, brickwork, or masonry
- minimum density of 550 kg/m³

8.5.1 OKTAGON/distance pipe

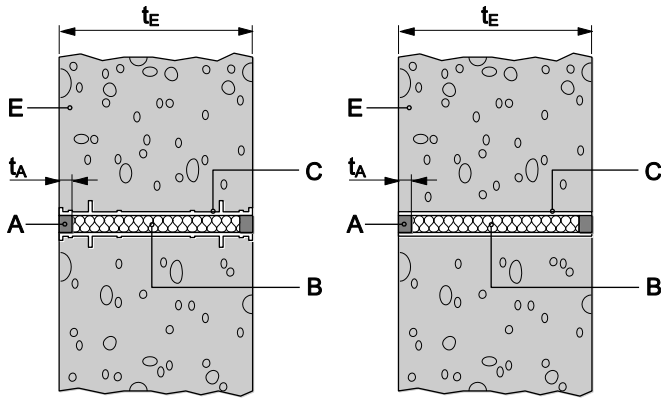

t_A ≥ 15 mm Hilti Firestop Acrylic Sealant CFS-S ACR (A)
on both sides of the opening of the formwork tie system / formwork distance pipe (C)
(B) mineral wool according to Annex B section 7.1.3
t_B = gap filled completely

	classification
OKTAGON formwork tie rod system ("Schalungsspannstelle", "Oktagon-Spreize") see section 7.1.5	EI 120
Formwork distance pipe ("Abstandsrohr", "Distanzrohr") see section 7.1.6	EI 120

8.6 cross laminated timber (CLT) walls

8.6.1 Binderholz Brettsperrholz BBS

- Binderholz Brettsperrholz BBS cross laminated timber acc. ETA-06/0009
- or CLT Types classified according EN 16351
- minimum element thickness 80/100 mm
- minimum layer thickness 20 mm,
- shall comprise Polyurethane and MUF based adhesives
- valid only for softwood CLT types such as: spruce/fir, pine, larch, stone pine

8.6.1.1 Binderholz Brettsperrholz BBS (t_E ≥ 80 mm)

local pipe insulation

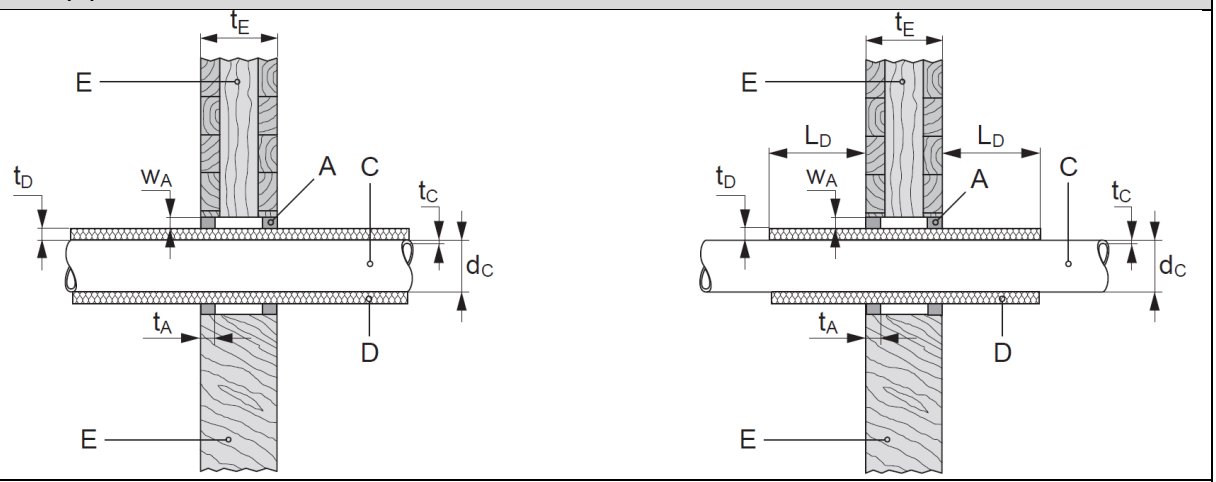

t_A ≥ 25 mm Hilti Firestop Acrylic Sealant CFS-S ACR (A)
(A) on both sides of the wall
maximum seal diameter: diameter of pipe incl. insulation + 15 mm
w_A max. 15 mm annular space
pipe insulation (D) made of mineral wool according to 7.1.4

copper pipes insulated (C), with local insulation (D) - sustained

pipe		insulation		classification
diameter (d_C) [mm]	wall thickness (t_C) [mm]	thickness (t_D) [mm]	length (L_D) [mm]	
≤ 54	1,5 - 14,2	20	≥ 450	EI 60 C/U

aluminium composite pipe (Geberit Mepla), with local insulation (D) – sustained

pipe		insulation		classification
diameter (d_C) [mm]	wall thickness (t_C) [mm]	thickness (t_D) [mm]	length (L_D) [mm]	
16 - 40	2,25 - 3,5	20	≥ 170	EI 60 U/C
50 - 63	4,5	20	≥ 390	EI 60 U/C

aluminium composite pipe (Geberit Systemrohr ML, rod + reel), with local insulation (D) – sustained				
pipe		insulation		classification
diameter (d_C) [mm]	wall thickness (t_C) [mm]	thickness (t_D) [mm]	length (L_D) [mm]	
16 - 40	2,0 - 3,0	20	≥ 170	EI 60 U/C
50 - 63	3,8 - 4,0	20	≥ 390	EI 60 U/C
composite pipe PE-xa (Rautitan flex), with local insulation (D) – sustained				
pipe		insulation		classification
diameter (d_C) [mm]	wall thickness (t_C) [mm]	thickness (t_D) [mm]	length (L_D) [mm]	
16 - 40	2,2 - 5,5	20	≥ 170	EI 60 U/C
50 - 63	6,9 - 8,6	20	≥ 390	EI 60 U/C
aluminium composite pipe (Rautitan stabil), with local insulation (D) – sustained				
pipe		insulation		classification
diameter (d_C) [mm]	wall thickness (t_C) [mm]	thickness (t_D) [mm]	length (L_D) [mm]	
16 - 40	2,2 - 6	20	≥ 170	EI 60 U/C
aluminium composite pipe (TECEflex), with local insulation (D) – sustained				
pipe		insulation		classification
diameter (d_C) [mm]	wall thickness (t_C) [mm]	thickness (t_D) [mm]	length (L_D) [mm]	
14 - 40	2,6 - 4,0	20	≥ 170	EI 60 U/C
50 - 63	4,5 - 6,0	20	≥ 390	EI 60 U/C
aluminium composite pipe (Sanfix Fosta), with local insulation (D) – sustained				
pipe		insulation		classification
diameter (d_C) [mm]	wall thickness (t_C) [mm]	thickness (t_D) [mm]	length (L_D) [mm]	
16 - 40	2,2 - 3,5	20	≥ 170	EI 60 U/C
50 - 63	4,0 - 4,0	20	≥ 390	EI 60 U/C

8.6.1.2 Binderholz Brettsperrholz BBS (t_E ≥ 100 mm)

In Binderholz Brettsperrholz BBS CLT wall, minimum 100 mm thick and up to EI 90 following minimum distances to specific penetration seals are valid:

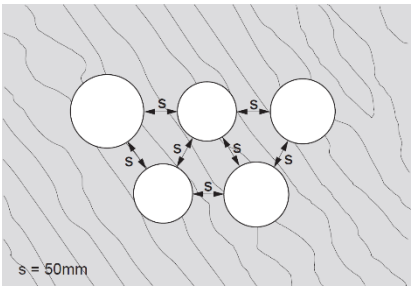

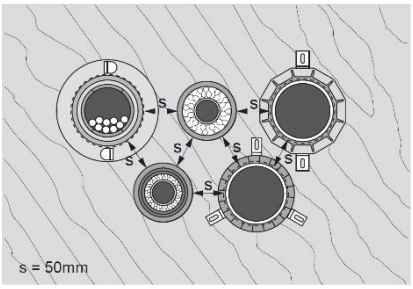

Distances between specific penetration seals - opening to opening (CFS-B, CFS-S ACR, CFS-C EL, CFS-CC):

s ≥ 50 mm

Limitation wall: CFS-B on copper only valid for the classification up to EI 60

local pipe insulation				
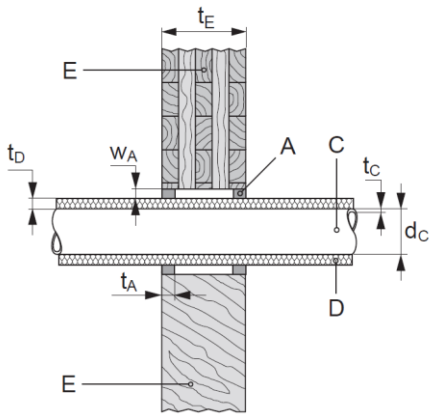				
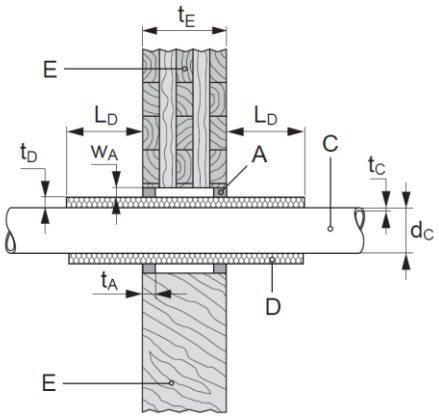				
t_A ≥ 25 mm Hilti Firestop Acrylic Sealant CFS-S ACR (A) on both sides of the wall maximum seal diameter: diameter of pipe incl. insulation + 15 mm w_A max. 15 mm annular space pipe insulation (D) made of mineral wool according to 7.1.4				
copper pipes insulated (C), with local insulation (D) - sustained				
pipe		insulation		classification
diameter (d_C) [mm]	wall thickness (t_C) [mm]	thickness (t_D) [mm]	length (L_D) [mm]	
≤ 42	1,0 - 14,2	20 - 40	≥ 450	EI 90 C/U
≤ 88,9	2,0 - 14,2	20 - 40	≥ 450	EI 90 C/U
aluminium composite pipe (Geberit Mepla) (C) with local insulation (D) - sustained				
pipe		insulation		classification
diameter (d_C) [mm]	wall thickness (t_C) [mm]	thickness (t_D) [mm]	length (L_D) [mm]	
16 - 40	2,25 - 3,5	20	≥ 170	EI 90 U/C
50 - 63	4,0 - 4,5	20	≥ 390	EI 90 U/C

aluminium composite pipe (Geberit Systemrohr ML, rod + reel), with local insulation (D) – sustained				
pipe		insulation		classification
diameter (d_C) [mm]	wall thickness (t_C) [mm]	thickness (t_D) [mm]	length (L_D) [mm]	
16 - 40	2,0 - 3,0	20	≥ 170	EI 90 U/C
50 - 75	3,8 - 4,6	20	≥ 390	EI 90 U/C
aluminium composite pipe (C) (Aquatherm blue pipe), with local insulation (D) – sustained				
pipe		insulation		classification
diameter (d_C) [mm]	wall thickness (t_C) [mm]	thickness (t_D) [mm]	length (L_D) [mm]	
75	10,4	20	≥ 390	EI 90 U/C
aluminium composite pipe (C) (Kelox KM 110), with local insulation (D) – sustained				
pipe		insulation		classification
diameter (d_C) [mm]	wall thickness (t_C) [mm]	thickness (t_D) [mm]	length (L_D) [mm]	
25 - 40	2,5 - 4,0	20	≥ 170	EI 90 U/C
50 - 75	4,5 - 7,5	20	≥ 390	EI 90 U/C
composite pipe PE-xa (C) (Rautitan flex), with local insulation (D) – sustained				
pipe		insulation		classification
diameter (d_C) [mm]	wall thickness (t_C) [mm]	thickness (t_D) [mm]	length (L_D) [mm]	
16 - 40	2,2 - 5,5	20	≥ 170	EI 90 U/C
50 - 63	6,9 - 8,6	20	≥ 390	EI 90 U/C
aluminium composite pipe (Rautitan stabil), with local insulation (D) – sustained				
pipe		insulation		classification
diameter (d_C) [mm]	wall thickness (t_C) [mm]	thickness (t_D) [mm]	length (L_D) [mm]	
16 - 40	2,2 - 6	20	≥ 170	EI 90 U/C
aluminium composite pipe (C) (TECEflex; DIN EN ISO 21003), with local insulation (D) – sustained				
pipe		insulation		classification
diameter (d_C) [mm]	wall thickness (t_C) [mm]	thickness (t_D) [mm]	length (L_D) [mm]	
14 - 40	2,6 - 4,0	20	≥ 170	EI 90 U/C
50 - 63	4,5 - 6,0	20	≥ 390	EI 90 U/C
aluminium composite pipe (C) (Uponor MLC, Uponor Unipipe PLUS), with local insulation (D) – sustained				
pipe		insulation		classification
diameter (d_C) [mm]	wall thickness (t_C) [mm]	thickness (t_D) [mm]	length (L_D) [mm]	
16 - 40	2,0 - 4,0	20	≥ 170	EI 90 U/C
50 - 75	4,5 - 7,5	20	≥ 390	EI 90 U/C

aluminium composite pipe (C) (Sanfix Fosta), with local insulation (D) – sustained				
pipe		insulation		classification
diameter (d_C) [mm]	wall thickness (t_C) [mm]	thickness (t_D) [mm]	length (L_D) [mm]	
16 - 40	2,2 - 3,5	20	≥ 170	EI 90 U/C
50 - 63	4,0 - 4,5	20	≥ 390	EI 90 U/C

8.6.2 Leno Brettsperrholz (t_E ≥ 148 mm)

- ZÜBLIN Leno cross laminated timber ETA-10/0241 or Z-9.1-501
- or CLT Types classified according EN 16351
- minimum element thickness wall 148 mm
- minimum layer thickness 20 mm
- shall comprise Polyurethane and MUF based adhesives
- valid only for softwood CLT types such as: spruce/fir, pine, larch, stone pine

local pipe insulation

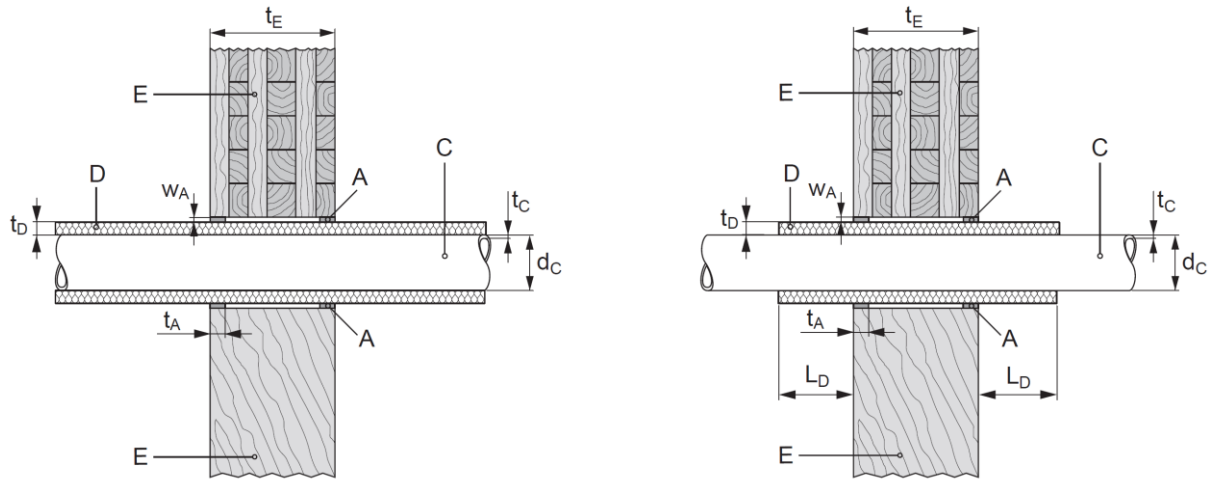

t_A ≥ 25 mm Hilti Firestop Acrylic Sealant CFS-S ACR (A) on both sides of the wall
maximum seal diameter: diameter of pipe incl. insulation + 4 mm
w_A max. 4 mm annular space
pipe insulation (D) made of mineral wool according to 7.1.4

copper pipes insulated (C), with continuous insulation (D) – sustained

pipe		insulation		classification
diameter (d_C) [mm]	wall thickness (t_C) [mm]	thickness (t_D) [mm]	length (L_D) [mm]	
≤ 42	1,5 - 14,2	≥ 19	∞	EI 90 C/U

copper pipes insulated (C), with local insulation (D) – sustained

pipe		insulation		classification
diameter (d_C) [mm]	wall thickness (t_C) [mm]	thickness (t_D) [mm]	length (L_D) [mm]	
≤ 42	1,5 - 14,2	19	≥ 430	EI 90 C/U

8.7 rigid floor (t_E ≥ 150 mm / ρ ≥ 550 kg/m³)

- must comprise concrete, aerated concrete,
- minimum density of 550 kg/m³

8.7.1 rigid floor - continued pipe insulation

sustained insulation	interrupted insulation
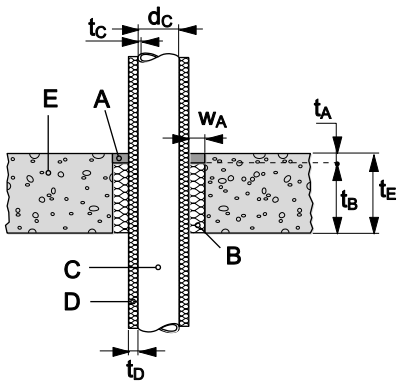	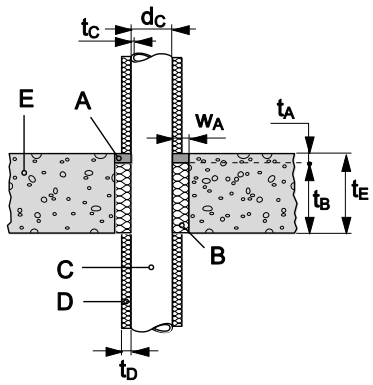

t_A ≥ 10 mm Hilti Firestop Acrylic Sealant CFS-S ACR (A) on the top side of the floor construction,
(B) mineral wool according to 7.1.3
t_B = gap filled completely
For classifications EI 90-C/U and EI 120-C/U:

- maximum penetration seal diameter: 300 mm
- annular space (w_A): 5 to 70 mm

For classifications EI 180-C/U:

- maximum penetration seal diameter: 170 mm
- annular space (w_A): 13 to 48 mm

pipe insulation (D) made of mineral wool according to 7.1.4

steel pipes (C) with continued insulation (D) – sustained

pipe		insulation		classification
diameter (d_C) [mm]	wall thickness (t_C) [mm]	thickness (t_D) [mm]	length (L_D) [mm]	
≤ 26,9 - 48,3	1,4 / 1,6 - 14,2	20	-	EI 180 C/U
≤ 26,9 - 168,3	1,4 / 2,6 - 14,2	40	-	EI 120 C/U

steel pipes (C) with continued insulation (D) – interrupted

pipe		insulation		classification
diameter (d_C) [mm]	wall thickness (t_C) [mm]	thickness (t_D) [mm]	length (L_D) [mm]	
≤ 26,9 - 48,3	1,4 / 1,6 - 14,2	20	-	EI 180 C/U
≤ 26,9 - 168,3	1,4 / 2,6 - 14,2	40	-	EI 120 C/U

copper pipes (C) with continued insulation (D) – sustained

pipe		insulation		classification
diameter (d_C) [mm]	wall thickness (t_C) [mm]	thickness (t_D) [mm]	length (L_D) [mm]	
≤ 42	1,5 - 14,2	20	-	EI 120 C/U
≤ 42 - 88,9	1,5 / 2,0 - 14,2	40	-	EI 90-C/U

copper pipes (C) with continued insulation (D) – interrupted				
pipe		insulation		classification
diameter (d_C) [mm]	wall thickness (t_C) [mm]	thickness (t_D) [mm]	length (L_D) [mm]	
≤ 28 - 42	1,0 / 1,5 - 14,2	20	-	EI 120 C/U
≤ 42	1,5 - 14,2	40	-	EI 120 C/U
aluminium composite pipe (Geberit Mepla) (C) with continued insulation (D) – sustained				
pipe		insulation		classification
diameter (d_C) [mm]	wall thickness (t_C) [mm]	thickness (t_D) [mm]	length (L_D) [mm]	
16 - 32	2,25 - 3,0	20	-	EI 90 U/C

8.7.2 rigid floor - local pipe insulation

8.7.2.1 rigid floor - pipes up to 168,3 mm

sustained insulation	interrupted insulation
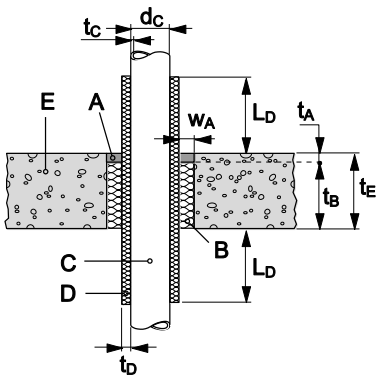	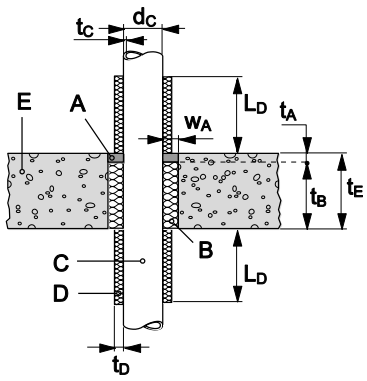

t_A ≥ 10 mm Hilti Firestop Acrylic Sealant CFS-S ACR (A) on the top side of the floor construction,

(B) mineral wool according to 7.1.3

t_B = gap filled completely

For classifications EI 90-C/U and EI 120-C/U:

- maximum penetration seal diameter: 300 mm
- annular space (w_A): 5 to 70 mm

For classifications EI 180-C/U:

- maximum penetration seal diameter: 170 mm
- annular space (w_A): 13 to 48 mm

pipe insulation (D) made of mineral wool according to 7.1.4

steel pipes (C) with local insulation (D) – sustained				
pipe		insulation		classification
diameter (d_C) [mm]	wall thickness (t_C) [mm]	thickness (t_D) [mm]	length (L_D) [mm]	
≤ 26,9 - 48,3	1,4 / 1,6 - 14,2	20	≥ 450	EI 180 C/U
≤ 168,3	2,6 - 14,2	40	≥ 500	EI 90 C/U
≤ 168,3	2,6 - 14,2	40	≥ 700	EI 120 C/U

steel pipes (C) with local insulation (D) – interrupted				
pipe		insulation		classification
diameter (d_C) [mm]	wall thickness (t_C) [mm]	thickness (t_D) [mm]	length (L_D) [mm]	
≤ 26,9 - 48,3	1,4 / 1,6 - 14,2	20	≥ 500	EI 180 C/U
≤ 168,3	2,6 - 14,2	40	≥ 500	EI 120 C/U
copper pipes (C) with local insulation (D) – sustained				
pipe		insulation		classification
diameter (d_C) [mm]	wall thickness (t_C) [mm]	thickness (t_D) [mm]	length (L_D) [mm]	
≤ 42	1,5 - 14,2	20	≥ 450	EI 120 C/U
≤ 42	1,5 - 14,2	20 - 40	≥ 700	EI 120 C/U
≤ 42 - 88,9	1,5 / 2,0 - 14,2	40	≥ 700	EI 120 C/U
≤ 88,9	2,0 - 14,2	40	≥ 500	EI 90 C/U
≤ 88,9	2,0 - 14,2	40	≥ 700	EI 180 C/U
copper pipes (C) with local insulation (D) – interrupted				
pipe		insulation		classification
diameter (d_C) [mm]	wall thickness (t_C) [mm]	thickness (t_D) [mm]	length (L_D) [mm]	
≤ 28 - 42	1,0 / 1,5 - 14,2	20 - 40	≥ 600	EI 120 C/U
≤ 28 - 42	1,0 / 1,5 - 14,2	40	≥ 500	EI 120 C/U
≤ 42	1,5 - 14,2	20 - 40	≥ 500	EI 120 C/U
aluminium composite pipe (Geberit Mepla) (C) with local insulation (D) – sustained				
pipe		insulation		classification
diameter (d_c) [mm]	wall thickness (t_c) [mm]	thickness (t_D) [mm]	length (L_D) [mm]	
16 - 32	2,25 - 3,0	20	≥ 500	EI 90 U/C

8.7.2.2 rigid floor - pipes up to 323,9 mm

sustained insulation	interrupted insulation
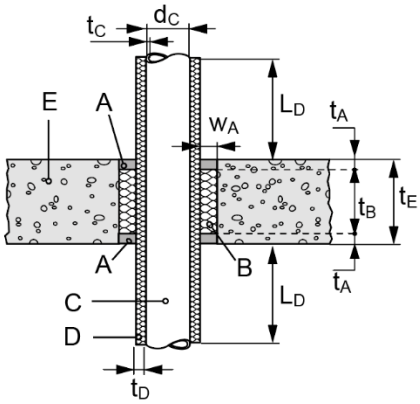	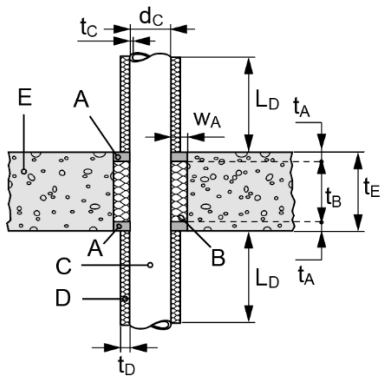

t_A ≥ 20 mm Hilti Firestop Acrylic Sealant CFS-S ACR (A) on both sides of the floor construction,
(B) mineral wool according to 7.1.3
t_B = gap filled completely
annular space (w_A): 10 to 50 mm
pipe insulation (D) made of mineral wool according to 7.1.4

steel pipes (C) with local insulation (D) – sustained				
pipe		insulation		classification
diameter (d_C) [mm]	wall thickness (t_C) [mm]	thickness (t_D) [mm]	length (L_D) [mm]	
≤ 323,9	4,5 - 14,2	60	≥ 1000	EI 120 C/U

steel pipes (C) with local insulation (D) – interrupted				
pipe		insulation		classification
diameter (d_C) [mm]	wall thickness (t_C) [mm]	thickness (t_D) [mm]	length (L_D) [mm]	
≤ 323,9	4,5 - 14,2	60	≥ 1000	EI 120 C/U

8.8 rigid floor (t_E ≥ 150 mm / ρ ≥ 2400 kg/m³)

- must comprise concrete
- minimum density of 2400 kg/m³

8.8.1 rigid floor - continued pipe insulation

Penetration seal:
see 8.7, except that the maximum penetration seal diameter for classifications EI 180-C/U is 260 mm with the annular space (w_A) depending on the pipe diameter.

copper/steel pipes (C) with continued insulation (D) – sustained				
pipe		insulation		classification
diameter (d_C) [mm]	wall thickness (t_C) [mm]	thickness (t_D) [mm]	length (L_D) [mm]	
≤ 28	1,0 - 14,2	20	-	EI 180 C/U
≤ 28 - 42	1,0 / 1,5 - 14,2	20	-	EI 120 C/U
≤ 42 - 88,9	1,5 / 2,0 - 14,2	40	-	EI 90 C/U
copper/steel pipes (C) with continued insulation (D) – interrupted				
pipe		insulation		classification
diameter (d_C) [mm]	wall thickness (t_C) [mm]	thickness (t_D) [mm]	length (L_D) [mm]	
≤ 28 - 42	1,0 / 1,5 - 14,2	20	-	EI 120 C/U
≤ 42 - 88,9	1,5 / 2,0 - 14,2	40	-	EI 120 C/U
≤ 88,9	2,0 - 14,2	40	-	EI 180 C/U

8.8.2 rigid floor - local pipe insulation

copper pipes (C) with local insulation (D) – sustained				
pipe		insulation		classification
diameter (d_C) [mm]	wall thickness (t_C) [mm]	thickness (t_D) [mm]	length (L_D) [mm]	
≤ 28	1,0 - 14,2	20	≥ 425	EI 180 C/U
≤ 28 - 42	1,0 / 1,5 - 14,2	20	≥ 450	EI 120 C/U
≤ 42	1,5 - 14,2	20 - 40	≥ 700	EI 120 C/U
≤ 42 - 88,9	1,5 / 2,0 - 14,2	40	≥ 700	EI 120 C/U
≤ 88,9	2,0 - 14,2	40	≥ 500	EI 90 C/U
≤ 88,9	2,0 - 14,2	40	≥ 700	EI 180 C/U
copper pipes (C) with local insulation (D) – interrupted				
pipe		insulation		classification
diameter (d_C) [mm]	wall thickness (t_C) [mm]	thickness (t_D) [mm]	length (L_D) [mm]	
≤ 28 - 42	1,0 / 1,5 - 14,2	20 - 40	≥ 500	EI 120 C/U
≤ 42 - 88,9	1,5 / 2,0 - 14,2	40	≥ 500	EI 120 C/U
≤ 88,9	2,0 - 14,2	40	≥ 500	EI 180 C/U

8.9 rigid floor (t_E ≥ 150 mm / ρ ≥ 550 kg/m³) – pipes without insulation

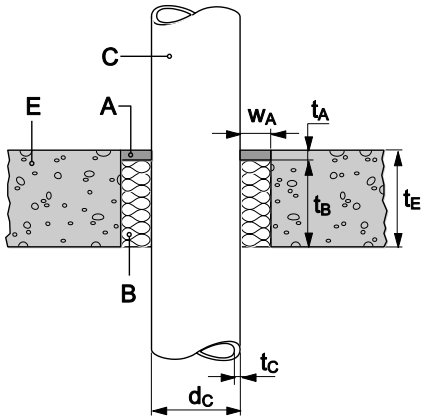

t_A ≥ 15 mm Hilti Firestop Acrylic Sealant CFS-S ACR (A) on the top side
(B) mineral wool according to 7.1.3
t_B = gap ≥ 135 mm
w_A ≤ 35 mm annular space

steel pipes (C) non-insulated

pipe		annular space w_A	classification
diameter (d_C) [mm]	wall thickness (t_C) [mm]	[mm]	
≤ 159	1,8 - 14,2	≤ 35	E 180 C/U

8.10 cross laminated timber (CLT) floor

8.10.1 Binderholz Brettsperrholz BBS

- Binderholz Brettsperrholz BBS cross laminated timber acc. ETA-06/0009
- CLT Types classified according EN 16351
- minimum element thickness 80/100/140 mm
- minimum layer thickness 20 mm,
- shall comprise Polyurethane and MUF based adhesives
- valid only for softwood CLT types such as: spruce/fir, pine, larch, stone pine

8.10.1.1 Binderholz Brettsperrholz BBS (t_E ≥ 80 mm)

local pipe insulation

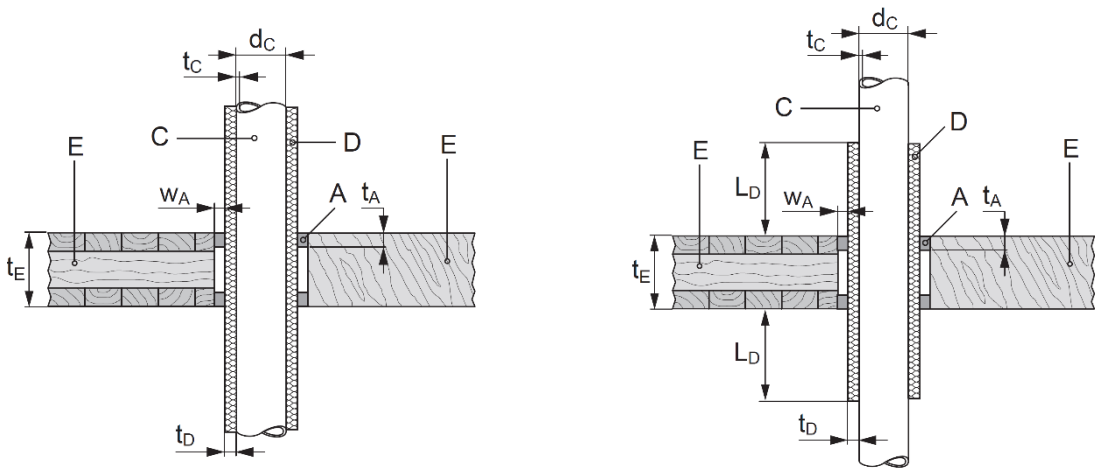

t_A ≥ 25 mm Hilti Firestop Acrylic Sealant CFS-S ACR (A) on both sides (no backfilling)
max. seal diameter: total diameter of pipe incl. insulation + 15 mm
w_A max. 15 mm annular space
pipe insulation (D) made of mineral wool according to 7.1.4

copper pipes insulated (C) with local insulation (D) - sustained

pipe		insulation		classification
diameter (d_C) [mm]	wall thickness (t_C) [mm]	thickness (t_D) [mm]	length (L_D) [mm]	
≤ 42	1 - 14,2	20	≥ 450	EI 60 C/U

aluminium composite pipe (Geberit Mepla) (C) with local insulation (D) - sustained

pipe		insulation		classification
diameter (d_C) [mm]	wall thickness (t_C) [mm]	thickness (t_D) [mm]	length (L_D) [mm]	
16 - 26	2,25 - 3,0	20	≥ 500	EI 60 U/C
40	3,5	20	≥ 500	EI 60 U/C

8.10.1.2 Binderholz Brettsperrholz BBS (t_E ≥ 100 mm)

local pipe insulation

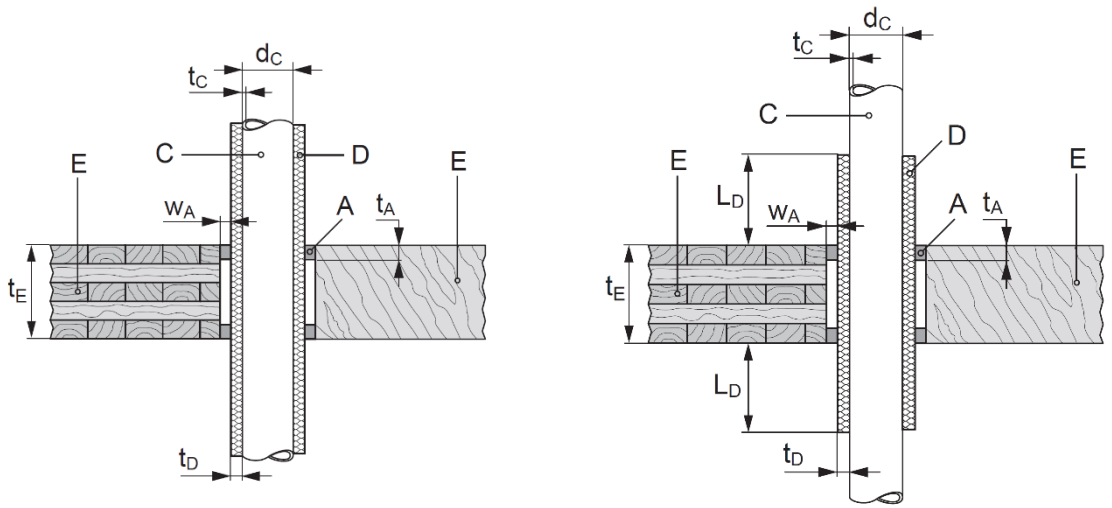

t_A ≥ 25 mm Hilti Firestop Acrylic Sealant CFS-S ACR (A) on both sides (no backfilling)
max. seal diameter: total diameter of pipe incl. insulation + 15 mm
w_A max. 15 mm annular space
pipe insulation (D) made of mineral wool according to 7.1.4

copper pipes insulated (C) with local insulation (D) - sustained

pipe		insulation		classification
diameter (d_C) [mm]	wall thickness (t_C) [mm]	thickness (t_D) [mm]	length (L_D) [mm]	
≤ 28	1,0 - 14,2	20 - 40	≥ 450	EI 60 C/U
≤ 42	1,2 - 14,2	20 - 40	≥ 450	EI 60 C/U
≤ 76	1,5 - 14,2	40	≥ 450	EI 90 C/U
≤ 88,9	2,0 - 14,2	40	≥ 450	EI 90 C/U

aluminium composite pipe (C) (Geberit Mepla) with local insulation (D) – sustained

pipe		insulation		classification
diameter (d_C) [mm]	wall thickness (t_C) [mm]	thickness (t_D) [mm]	length (L_D) [mm]	
16 - 40	2,25 -3,5	20 - 40	≥ 170	EI 60 U/C
50 - 75	4,5 - 4,7	20 - 40	≥ 390	EI 60 U/C
63	4,5	20-40	≥ 390	EI 90 U/C

aluminium composite pipe (C) (Geberit Systemrohr ML, rod + reel) with local insulation (D) – sustained

pipe		insulation		classification
diameter (d_C) [mm]	wall thickness (t_C) [mm]	thickness (t_D) [mm]	length (L_D) [mm]	
16 - 3,0	2,0 - 3,0	20	≥ 170	EI 60 U/C
50 - 75	3,8 - 4,6	20	≥ 390	EI 60 U/C

aluminium composite pipe (C) (Aquatherm blue pipe) with local insulation (D) – sustained				
pipe		insulation		classification
diameter (d_C) [mm]	wall thickness (t_C) [mm]	thickness (t_D) [mm]	length (L_D) [mm]	
75	10,4	20	≥ 390	EI 60 U/C
aluminium composite pipe (C) (Fränkische Rohrwerke Alpex L) with local insulation (D) – sustained				
pipe		insulation		classification
diameter (d_C) [mm]	wall thickness (t_C) [mm]	thickness (t_D) [mm]	length (L_D) [mm]	
75	5	20	≥ 390	EI 60 U/C
aluminium composite pipe (C) (Kelox KM 110) with local insulation (D) – sustained				
pipe		insulation		classification
diameter (d_C) [mm]	wall thickness (t_C) [mm]	thickness (t_D) [mm]	length (L_D) [mm]	
75	7,5	20 - 40	≥ 390	EI 60 U/C
composite pipe PE-xa (C) (Rautitan flex), with local insulation (D) – sustained				
pipe		insulation		classification
diameter (d_C) [mm]	wall thickness (t_C) [mm]	thickness (t_D) [mm]	length (L_D) [mm]	
16 - 40	2,2 - 5,5	20	≥ 170	EI 60 U/C
50 - 63	6,9 - 8,6	20	≥ 390	EI 60 U/C
aluminium composite pipe (C) (Rautitan stabil) with local insulation (D) – sustained				
pipe		insulation		classification
diameter (d_C) [mm]	wall thickness (t_C) [mm]	thickness (t_D) [mm]	length (L_D) [mm]	
16 - 40	2,2 - 6	20	≥ 170	EI 60 U/C
aluminium composite pipe (TECEflex; DIN EN ISO 21003) with local insulation (D) – sustained				
pipe		insulation		classification
diameter (d_C) [mm]	wall thickness (t_C) [mm]	thickness (t_D) [mm]	length (L_D) [mm]	
14 - 40	2,6 - 4,0	20	≥ 170	EI 60 U/C
50 - 63	4,5 - 6,0	20	≥ 390	EI 60 U/C
aluminium composite pipe (C) (Uponor MLC, Uponor Unipipe PLUS), with local insulation (D) – sustained				
pipe		insulation		classification
diameter (d_C) [mm]	wall thickness (t_C) [mm]	thickness (t_D) [mm]	length (L_D) [mm]	
75	7,5	20 - 40	≥ 390	EI 60 U/C

aluminium composite pipe (C) (Sanfix Fosta) with local insulation (D) – sustained				
pipe		insulation		classification
diameter (d_C) [mm]	wall thickness (t_C) [mm]	thickness (t_D) [mm]	length (L_D) [mm]	
16	2,2	20	≥ 170	EI 60 U/C
20	2,8	20	≥ 170	EI 60 U/C

8.10.1.3 Binderholz Brettsperrholz BBS (t_E ≥ 140 mm)

In Binderholz Brettsperrholz BBS CLT floor, minimum 140 mm thick and up to EI 90 following minimum distances to specific penetration seals are valid.

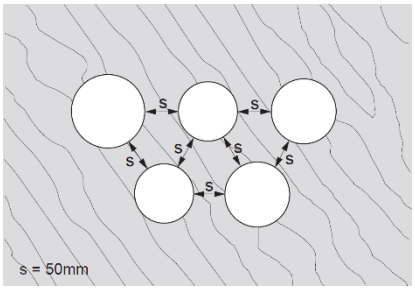

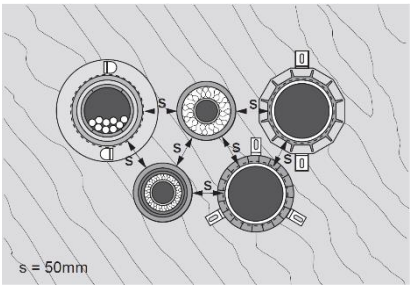

Distances between specific penetration seals - opening to opening (CFS-B, CFS-S ACR, CFS-C EL, CFS-CC):

s ≥ 50 mm

Limitation floor: CFS-B on copper only with min. 16 - 36,5 mm synthetic rubber insulation; CFS-SL GA only in linear arrangement

local pipe insulation

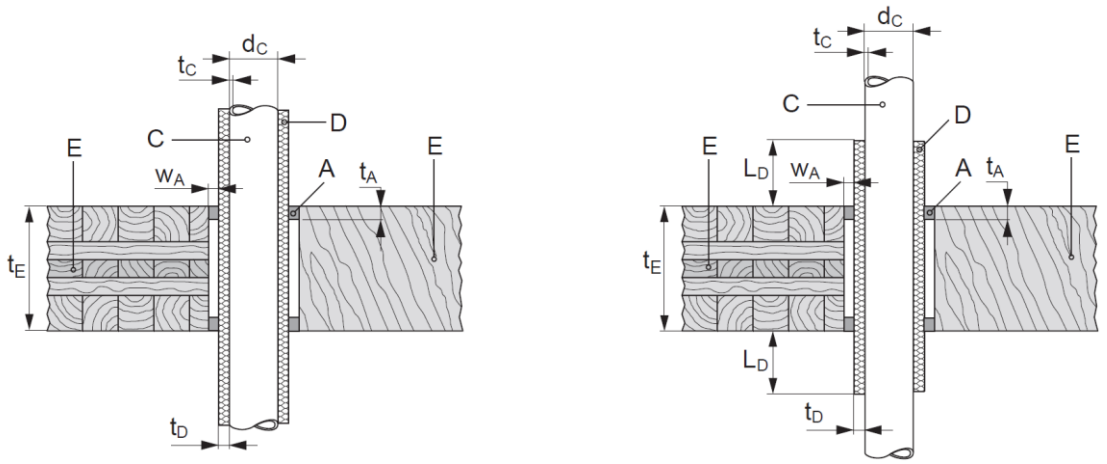

t_A ≥ 25 mm Hilti Firestop Acrylic Sealant CFS-S ACR (A) on both sides (no backfilling)
max. seal diameter: total diameter of pipe incl. insulation + 15 mm
w_A max. 15 mm annular space
pipe insulation (D) made of mineral wool according to 7.1.4

copper pipes insulated (C) with local insulation (D) - sustained

pipe		insulation		classification
diameter (d_C) [mm]	wall thickness (t_C) [mm]	thickness (t_D) [mm]	length (L_D) [mm]	
≤ 28	1,0 - 14,2	20	≥ 450	EI 120 C/U
≤ 42	1,2 - 14,2	20	≥ 450	EI 120 C/U
≤ 76	1,5 - 14,2	20 - 40	≥ 450	EI 90 C/U
≤ 88,9	2,0 - 14,2	20 - 40	≥ 450	EI 90 C/U

aluminium composite pipe (Geberit Mepla) (C) with local insulation (D) - sustained				
pipe		insulation		classification
diameter (d_C) [mm]	wall thickness (t_C) [mm]	thickness (t_D) [mm]	length (L_D) [mm]	
16 - 40	2,25 - 3,5	20 - 40	≥ 170	EI 90 U/C
50 - 63	4,0 - 4,5	20 - 40	≥ 370	EI 90 U/C
75	4,7	20	≥ 370	EI 90 U/C
aluminium composite pipe (Geberit Mepla) (C) - with local insulation (D) - sustained				
pipe		insulation		classification
diameter (d_C) [mm]	wall thickness (t_C) [mm]	thickness (t_D) [mm]	length (L_D) [mm]	
16 - 26	2,25 - 3,5	20	≥ 500	EI 120 U/C
40	3,5	20	≥ 500	EI 120 U/C
aluminium composite pipe © (Geberit Systemrohr ML, rod + reel) with local insulation (D) – sustained				
pipe		insulation		classification
diameter (d_C) [mm]	wall thickness (t_C) [mm]	thickness (t_D) [mm]	length (L_D) [mm]	
16 - 40	2,0 - 3,0	20	≥ 170	EI 90 U/C
50 - 75	3,8 - 4,6	20	≥ 390	EI 90 U/C
aluminium composite pipe © (Sanipex MT) with local insulation (D) – sustained				
pipe		insulation		classification
diameter (d_C) [mm]	wall thickness (t_C) [mm]	thickness (t_D) [mm]	length (L_D) [mm]	
16 - 40	2,25 - 3,5	20	≥ 170	EI 90 U/C
50 - 63	4,0 - 4,5	20	≥ 390	EI 90 U/C
aluminium composite pipe © (Aquatherm blue pipe) with local insulation (D) – sustained				
pipe		insulation		classification
diameter (d_C) [mm]	wall thickness (t_C) [mm]	thickness (t_D) [mm]	length (L_D) [mm]	
75	10,4	20 - 40	≥ 390	EI 90 U/C

8.10.2 Leno Brettsperrholz (t_E ≥ 220mm)

- ZÜBLIN Leno cross laminated timber ETA-10/0241 or Z-9.1-501
- or CLT Types classified according EN 16351
- minimum element thickness floor 220 mm
- minimum layer thickness 20 mm
- shall comprise Polyurethane and MUF based adhesives
- valid only for softwood CLT types such as: spruce/fir, pine, larch, stone pine

local pipe insulation

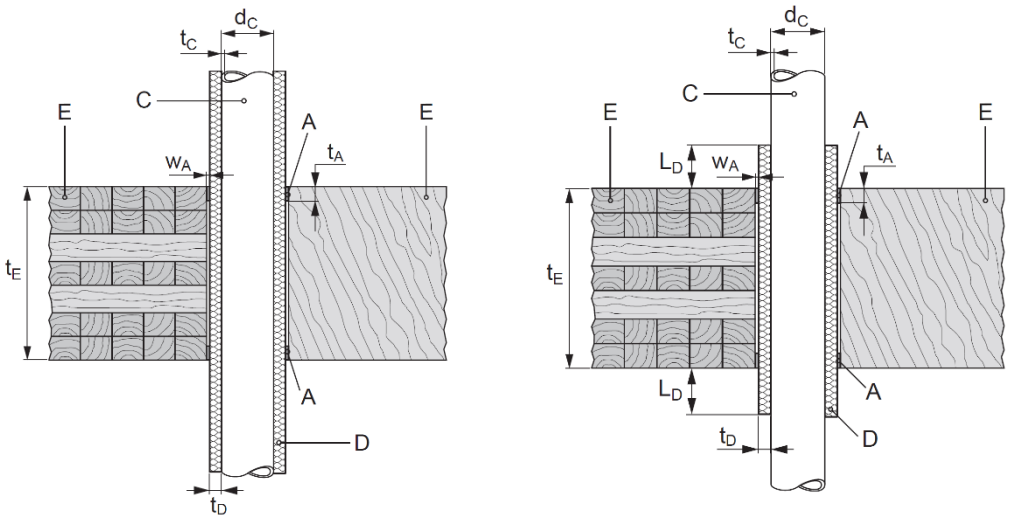

t_A ≥ 25 mm Hilti Firestop Acrylic Sealant CFS-S ACR (A) on both sides of the floor (no backfilling)

max. seal diameter: total diameter of pipe incl. insulation + 4 mm

w_A max. 4 mm annular space

pipe insulation (D) made of mineral wool according to 7.1.4

copper pipes insulated (C) with local insulation (D) - sustained

pipe		insulation		classification
diameter (d_C) [mm]	wall thickness (t_C) [mm]	thickness (t_D) [mm]	length (L_D) [mm]	
≤ 42	1,5 - 14,2	19	≥ 430	EI 90 C/U

8.10.3 Binderholz Brettsperrholz BBS with gypsum (t_E ≥ 120 mm)

- Binderholz Brettsperrholz BBS 90 cross laminated timber acc. ETA-06/0009
- CLT Types classified according EN 16351
- minimum CLT thickness 90 mm + 2x15mm gypsum plasterboard below
- minimum layer thickness 20 mm
- shall comprise Polyurethane and MUF based adhesives
- valid only for softwood CLT types such as: spruce/fir, pine, larch, stone pine

local pipe insulation

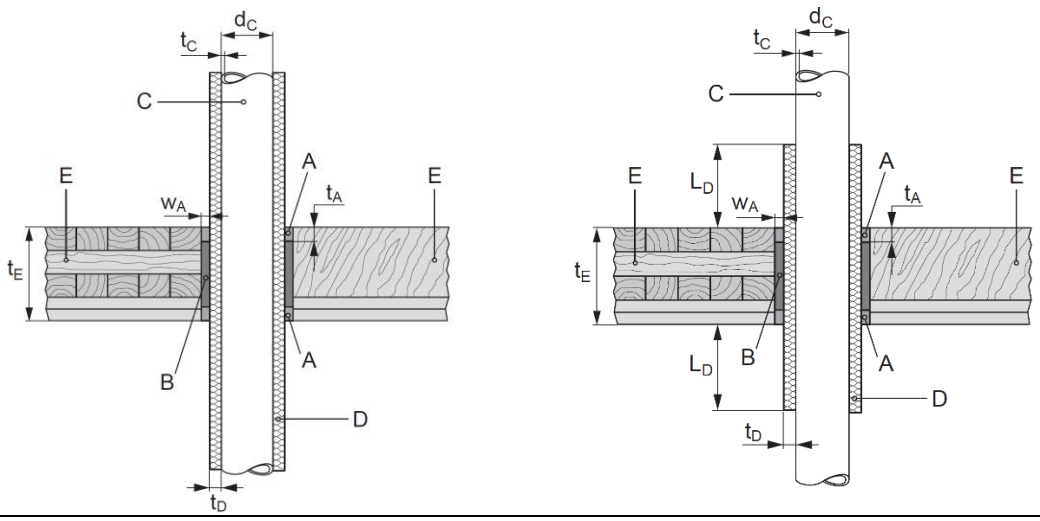

t_A ≥ 15 mm Hilti Firestop Acrylic Sealant CFS-S ACR (A) on both sides
max. seal diameter: 98 mm
w_A max. 23 mm annular space
backfilling (B) loose mineral wool (full depth) according to 7.1.3
pipe insulation (D) made of mineral wool according to 7.1.4

steel pipes insulated (C) with pipe insulation (D) - CS

pipe		insulation		classification
diameter (d_C) [mm]	wall thickness (t_C) [mm]	thickness (t_D) [mm]	length (L_D) [mm]	
≤ 35	1,5 - 14,2	20	∞	EI 120 C/U

8.11 timber construction Lignatur floor (t_E ≥ 160 mm)

- ETA-11/0137 Lignatur element (LKE, LFE or LSE)
- sandwich like construction made out of rigid wood including
- bottom skins with thickness t_i ≥ 64 mm for EI 60

local pipe insulation

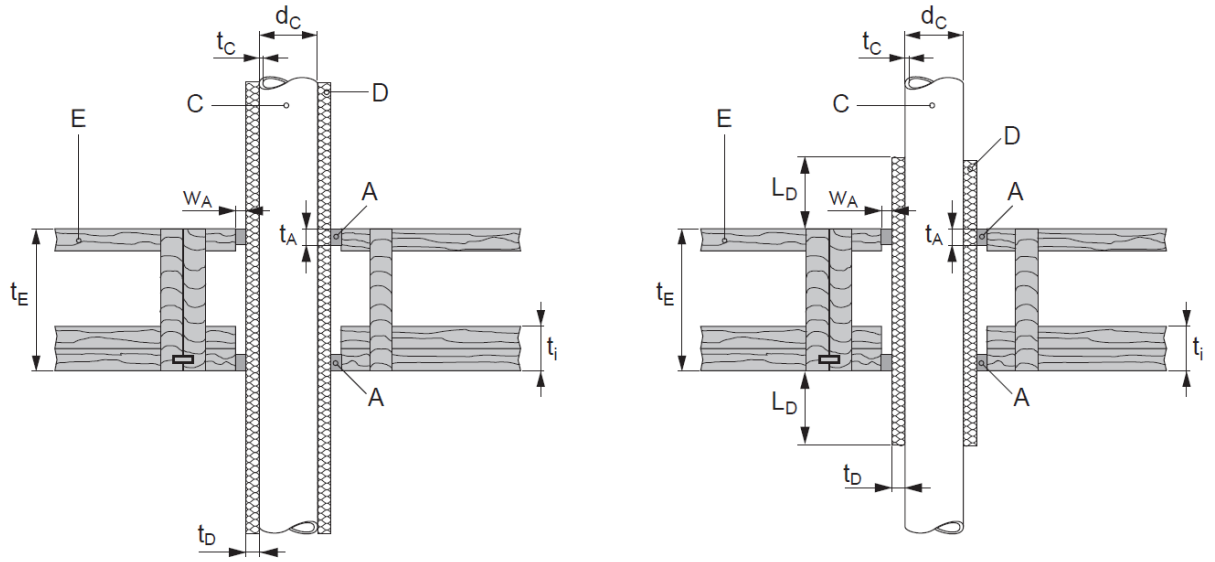

t_A ≥ 25 mm Hilti Firestop Acrylic Sealant CFS-S ACR (A) on both sides of the floor (no backfilling)
w_A max. 15 mm annular space
t_i ≥ 64 mm
t_e ≥ 160 mm
pipe insulation (D) made of mineral wool according to 7.1.4

copper pipes insulated (C) with continuous insulation (D) – sustained				
pipe		insulation		classification
diameter (d_C) [mm]	wall thickness (t_C) [mm]	thickness (t_D) [mm]	length [mm]	
≤ 28	1,0 - 14,2	≥ 20	∞	EI 60 C/U
≤ 54	1,5 - 14,2	≥ 20	∞	EI 60 C/U
≤ 88,9	2,0 - 14,2	≥ 40	∞	EI 60 C/U
copper pipes insulated (C) with local insulation (D) – sustained				
≤ 28	1,0 - 14,2	20	≥ 170	EI 60 C/U
≤ 42	1,2 - 14,2	20	≥ 390	EI 60 C/U
≤ 54	1,5 - 14,2	20	≥ 390	EI 60 C/U
aluminium composite pipe (C) (Fränkische Alpex L) with local insulation (D) – sustained				
pipe		insulation		classification
diameter (d_C) [mm]	wall thickness (t_C) [mm]	thickness (t_D) [mm]	length (L_D) LS [mm]	
75	5	20	≥ 390	EI 60 U/C

aluminium composite pipe (C) (Aquatherm Greenpipe) with local insulation (D) – sustained				
pipe		insulation		classification
diameter (d_C) [mm]	wall thickness (t_C) [mm]	thickness (t_D) [mm]	length (L_D) LS [mm]	
75	10,4	20 - 40	≥ 390	EI 60 U/C
aluminium composite pipe (C) (Kelox KM 110) with local insulation (D) – sustained				
pipe		insulation		classification
diameter (d_C) [mm]	wall thickness (t_C) [mm]	thickness (t_D) [mm]	length (L_D) LS [mm]	
16	2	20 - 40	≥ 170	EI 60 U/C
75	7,5	20 - 40	≥ 390	EI 60 U/C
aluminium composite pipe (C) (UPONOR Unipipe) with local insulation (D) – sustained				
pipe		insulation		classification
diameter (d_C) [mm]	wall thickness (t_C) [mm]	thickness (t_D) [mm]	length (L_D) LS [mm]	
16	2	20 - 40	≥ 170	EI 60 U/C
75	7,5	20 - 40	≥ 390	EI 60 U/C
aluminium composite pipe (C) (Geberit Mepla) with local insulation (D) – sustained				
pipe		insulation		classification
diameter (d_C) [mm]	wall thickness (t_C) [mm]	thickness (t_D) [mm]	length (L_D) LS [mm]	
16 - 63	2,25 / 4,5	20 - 40	≥ 170	EI 60 U/C
75	4,7	20	≥ 390	EI 60 U/C
aluminium composite pipe (C) (Rautitan stabil) with local insulation (D) – sustained				
pipe		insulation		classification
diameter (d_C) [mm]	wall thickness (t_C) [mm]	thickness (t_D) [mm]	length (L_D) LS [mm]	
16	2	20 - 40	≥ 170	EI 60 U/C
16 - 63	2 - 8,6	20 - 40	≥ 390	EI 60 U/C
aluminium composite pipe (C) (Viega SANFIX fosta) with local insulation (D) – sustained				
pipe		insulation		classification
diameter (d_C) [mm]	wall thickness (t_C) [mm]	thickness (t_D) [mm]	length (L_D) LS [mm]	
16 - 20	2,2 - 4,5	20 - 40	≥ 170	EI 60 U/C
16 - 63	2 - 8,6	20 - 40	≥ 390	EI 60 U/C
aluminium composite pipe (C) (TECE TECEflex) with local insulation (D) – sustained				
pipe		insulation		classification
diameter (d_C) [mm]	wall thickness (t_C) [mm]	thickness (t_D) [mm]	length (L_D) LS [mm]	
15	2,6	20 - 40	≥ 170	EI 60 U/C
15 - 32	2,6 - 4	20 - 40	≥ 390	EI 60 U/C
63	6	20 - 40	≥ 390	EI 60 U/C

8.12 timber construction wood frame floor (t_E ≥ 236 mm)

- minimum total thickness ≥ 236 mm
- wood frame strength class C24 acc. EN 388 / min. 100 mm in width and min. 160 mm in height
- stonewool density ρ ≥ 44 kg/m³ / min. 160 mm thick
- bottom side covered with 2x18mm EN 520 board
- topside covered with inner layer 22mm OSB / outer layer 1x18mm EN 520 board
- OSB: type e.g.: “Agepan/Greenline OSB 3 PUR” acc. EN 300 or DIN EN 13986

local pipe insulation

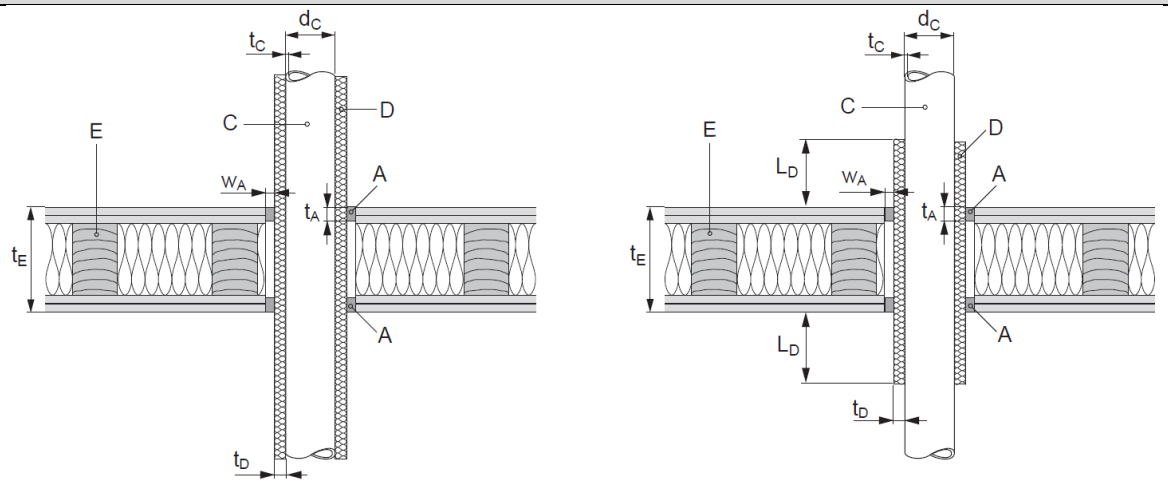

t_A ≥ 25 mm Hilti Firestop Acrylic Sealant CFS-S ACR (A) on both sides (no backfilling)
max. seal diameter: total diameter of pipe incl. insulation + 4 mm
w_A max. 4 mm annular space
pipe insulation (D) made of mineral wool according to 7.1.4

copper pipes insulated (C) with local insulation (D) - sustained

pipe		insulation		classification
diameter (d_C) [mm]	wall thickness (t_C) [mm]	thickness (t_D) [mm]	length (L_D) [mm]	
≤ 42	1,5 - 14,2	19	≤ 390	EI 90 U/C

9 Annex C – instruction for use/product literature

The application (appropriate installation) of Hilti Firestop Acrylic CFS-S ACR is described and illustrated in chapter 8 – Annex C.

The folder *Instruction for use* is available at Hilti's website: www.hilti.group

For safe handling the provisions of the Material Safety Data Sheet for the product shall be followed.

10 Annex D – abbreviations used in drawings

Abbreviation	Description
A	Hilti Firestop Acrylic Sealant CFS-S ACR
B	backfilling material
C	penetrating service
D	pipe insulation
E, E_1, E_2,…	building element (wall, floor)
L_D	length of insulation
d_C	diameter of penetrating service
s, s_1, s_2	distances
t_A	depth of sealant application
t_B	thickness of backfilling material
t_C	pipe wall thickness
t_D	thickness of insulation
t_E	thickness of the building element
w_A	width of annular space
t_i	Thickness of the bottom skin (Lignatur)